TÜVRheinland®
DIN CERTCO
Genau. Richtig.

Certification Scheme

Plastic pipe system (pressure pipes and fittings)

(Edition: May 2017)

DIN CERTCO ● Alboinstraße 56 ● D-12103 Berlin
Tel: +49 30 7562-1131 ● Fax: +49 30 7562-1141 ● E-Mail: info@dincertco.de ● www.dincertco.de

Preface

DIN CERTCO was founded in 1972 by DIN Deutsches Institut für Normung e. V., is now part of the TÜV Rheinland Group and is the certification body for issuing DIN marks and other certification marks for products, persons, services as well as companies based on DIN standards and similar specifications. Due to its independence, neutrality, competence and many years of experience, DIN CERTCO enjoys a high reputation both at home and abroad.

In order to prove the functionality of the system and our competence as a certification body, we have been accredited, certified or recognised by independent domestic and foreign bodies in both the voluntary and legally regulated areas. Our accreditations.

Alongside the General Terms and Conditions and Testing- Registration- and Certification Regulations in place at DIN CERTCO, this certification forms the basis for enabling providers of Plastic pipe systems to label their products with the “DIN*plus*” quality mark. You document hereby that your products meet all the requirements of the underlying standards and exceed them in many cases.

The “DIN*plus*” quality mark creates customer confidence: they can rest assured that an independent, neutral and specialist institution has carefully investigated and reviewed all the inspection criteria. External quality controls also ensure that product quality is kept at a high level during ongoing manufacture. Thus, customers receives added value that they can take into consideration when making purchase decisions.

Plastic pipe systems are granted the “DIN*plus*” quality mark if they meet the requirements listed in section 4 and in respective annexes in accordance with the procedure described in this certification scheme.

All certificate holders can be viewed on the DIN CERTCO homepage (www.dincertco.tuv.com), which is updated on a daily basis.

Start of validity

This certification scheme is valid after 2017-05-01.

Earlier editions

Certification schemes plastic pipe systems (pressure pipes and fittings) 2017-01
Certification schemes plastic pipe systems (pressure pipes and fittings) 2015-03

Changes

Compared to the previous editions the following changes were made:

Annex Q an R has been newly inserted.

Remark

The German version of this certification scheme shall be taken as authoritative. No guarantee can be given to the English translation.

CONTENT

1 Scope of application 5
1.1 DIN CERTO quality mark DIN*plus* 6
1.2 Voluntary Commitment – KRV-recycling system 6
2 Testing and certification principles 6
3 Terms, abbreviations and symbols 6
4 Product requirements 9
5 Test 9
5.1 General 9
5.2 Types of tests 9
5.2.1 Initial test (type testing) 9
5.2.2 Supplementary test 10
5.2.3 Surveillance test (control test) 10
5.2.4 Repeat tests 11
5.2.5 Special test 11
5.3 Sampling 12
5.4 Test procedure 12
5.5 Test report 12
6 Certification 13
6.1 Application for certification 13
6.2 Classification of types and sub-types 13
6.3 Conformity evaluation 14
6.4 Certificate and rights to use the certificate 14
6.5 Sublicenses 14
6.6 Publications 15
6.7 Validity of the certificate 15
6.8 Extension of the certificate 15
6.9 Expiry of the certificate 15
6.10 Changes/Supplements 16
6.10.1 Changes/Supplements to the product 16
6.10.2 Changes to the test standard 16
6.11 Product defects 16
7 Self-monitoring by the manufacturer 17
7.1 Factory Production Control FPC (“Werkseigen Produktionskontrolle WPK”) 17
7.1.1 Records 17
7.1.2 Personnel 18
7.1.3 Equipment 18
7.1.4 Raw materials and components 19
7.1.5 Production control 19
7.1.6 Traceability and labelling 19
7.1.7 Non-compliant products 19

7.1.8 Corrective action 19
7.1.9 Handling, storage and packaging 19
7.2 Quality management system 20
8 External monitoring by DIN CERTCO 20
8.1 General 20
8.2 Inspections 20
8.3 Monitoring tests (control tests) 20
Annex A Manufacturer declaration 21
Annex B declaration Supplier/Distributor 22
Annex C Test describtion 23
Annex D ZP 14.3.1 - DA Pressure pipes made from polyethylene (PE) for industry/general – PE 80, PE 100, PE 100-RC 27
Annex E ZP 14.3.1 AW - Pressure pipes made from polyethylene (PE) for sewage – PE 80, PE 100, PE 100-RC 36
Annex F ZP 14.3.1 TW - Pressure pipes made from polyethylene (PE) for drinking water – PE 80, PE 100, PE 100-RC 45
Annex G ZP 14.3.1 G - Pressure pipes made from polyethylene (PE) for gas – PE 80, PE 100, PE 100-RC 54
Annex H ZP 9.12.1 - Multilayer composite plastic piping made from PP-RCT with PP-RCT- intermediate fiber glass layer 63
Annex I ZP 9.18.1 - Pressure pipes made from PP-RCT with coating made from AL/PP-R 73
Annex J ZP 10.25.1-8 - Pressure pipes and fittings made from PP-RCT (polypropylene random-Copolymerisate) for installation 84
Annex K ZP 9.4.1 - Pressure pipes made from PP (Polypropylene) 96
Annex L ZP 10.2.1-8 – Pressure pipes and fittings made from chlorinated polyvinyl chloride (PVC-C) 104
Annex M ZP 1.1.1 TW - Pressure pipes and fittings made from PVC-U (unplasticized Polyvinyl chloride) for drinking water 116
Annex N ZP 1.1.1 DA - Pressure pipes and fittings made of PVC-U (unplasticized polyvinyl chloride) for industry/general 134
Annex O ZP 14.23.39 - Pressure pipes made from (PE) for alternativ installation techniques – PE 100-RC 151
Annex P ZP 24.26.45 - Material plasticizer-free polyamide (PA-U) for the production of high pressure pipes and fittings in the gas supply 163
Annex Q ZP 9.27.47 Multilayer composite plastic pipes made from polyethylene (PE) with PE intermediate glass fibre layer for high pressure applications 167
Annex R ZP 9.27.01 – Pressure pipes made of polyethylene (PE) with short fiber reinforced intermediate PE-layer 179

1 Scope of application

This certification scheme applies for plastic pipe systems (materials, pipes, piping fittings, fittings, seals) for the scope of application of pressure pipes and piping fittings (see table 1) and contains in conjunction with the testing principles listed below all requirements for the award of the quality mark “DIN*plus*”.

This certification scheme establishes application specific requirements that need to be met by the product itself, as well as requirements relating to the associated testing, monitoring and certification. In clause 1 to 8 of the main part, the certification procedure is elucidated, the application specific requirements (inspection scope etc.) can be found in the respective annexes.

Table 1 Scope of application of the certification scheme

Scope of application plastic pipe systems		**see**
1 pressure pipes and fittings		
ZP 14.3.1 DA	Pressure pipes made from polyethylene (PE) for industry/general ─PE 80, PE 100, PE 100-RC	Annex D – page 27
ZP 14.3.1 AW	Pressure pipes made from polyethylene (PE) for waste water─ PE 80, PE 100, PE 100-RC	Annex E - page 36
ZP 14.3.1 TW	Pressure pipes made from polyethylene (PE) for drinking water – PE 80, PE 100, PE 100-RC	Annex F - page 45
ZP 14.3.1 G	Pressure pipes made from polyethylene (PE) for gas – PE 80, PE 100, PE 100-RC	Annex G - page 54
ZP 9.12.1	Multilayer composite plastic piping made from PP-RCT with PP-RCT- intermediate fiber glass layer	Annex H - page 63
ZP 9.18.1	Pressure pipes made from PP-RCT with coating made from AL/PP-R	Annex I - page 73
ZP 10.25.1-8	Pressure pipes and fittings made from PP-RCT (polypropylene random-Copolymerisate) for installation	Annex J - page 84
ZP 9.4.1	Pressure pipes made from PP	Annex K - page 96
ZP 10.2.1-8	Pressure pipes and fittings made from PVC-C	Annex L - page 104
ZP 1.1.1 TW	Pressure pipes and fittings made from PVC-U (unplasticized polyvinyl chloride) for drinking water	Annex M - page 116
ZP 1.1.1 DA	Pressure pipes and fittings made from PVC-U (unplasticized polyvinyl chloride) for industry/generel	Annex N - page 134
ZP 14.23.39	Pressure pipes made from (PE) for alternativ installation techniques – PE 100-RC	Annex O - page 151
ZP 24.26.45	Material plasticizer-free polyamide (PA-U) for the production of high pressure pipes and fittings in the gas supply	Annex P - page 163
ZP 9.27.47	Multilayer composite plastic pipes made from polyethylene (PE) with PE intermediate glass fibre layer for high pressure applications	Annex Q - page 167
ZP 9.27.01	Pressure pipes made of polyethylene (PE) with short fiber reinforced intermediate PE-layer	Annex Q – page 179

If the certified products are used as construction products within the meaning of the Construction Products Regulation (BauPVO), they may only be used:

- In the case of regulated building products of one of the listed corresponding technical rules in the “Bauregelliste A, Teil 1”, and provide the required proof in each case

- in the case of non-regulated building products, a “allgemeine bauaufsichtlich Zulassung” or test certificate or an approval in individual cases

For products which correspond to these requirements a certificate of compliance can be issued by DIN CERTO as recognized certification authority by DIBt.

1.1 DIN CERTO quality mark DIN*plus*

Products for which the provider is authorized by a valid certificate to use the DIN CERTCO quality mark "DIN*plus*" are characterized by a plus in quality compared to the minimum normative requirements required or customary for this product area.

The *plus* in quality for the respective areas of application of this certification program can be found in the corresponding annexes.

Trademark of the Kunststoffrohrverband e.V. (KRV)

Products that have been certified according to the present certification program can, while maintaining the license rights, also be marked with the trademark of the Kunststoffrohrverband e.V. (KRV) (see section 6.4).

1.2 Voluntary Commitment – KRV-recycling system

At European level, industry has made a voluntary commitment to the European Commission to recycle the increasing amounts of waste from its products. The Kunststoffrohrverband e.V. has joined this so-called Voluntary Commitment and set up a collection and recycling system for plastic pipe waste.

Manufacturers who wish to have their pipes and fittings certified under the present certification program must support the Voluntary Commitment and participate contractually in the KRV recycling system.

2 Testing and certification principles

The basis for testing and certification is given for each application area in the corresponding annexes (see Table 1). In the case of dated references, only the version referred to applies. In the case of undated references, the most recent edition of the referenced document, including all amendments, shall apply.

In addition, the following applies to all products:

- this certification scheme
- the general terms and conditions of TÜV DIN CERTCO
- the corresponding DIN CERTCO fees schedule
- the testing principles of the respiective Annex

3 Terms, abbreviations and symbols

Type test TT: A test to be performed to prove that the product meets the technical specifications and requirements on which it is based.

Initial testing: A type test that is carried out by or on behalf of a certification authority for certification purposes.

Batch release test BRT: A test to be performed by the manufacturer on a batch of the product in which all requirements of the underlying technical specifications must be met prior to the release of the batch.

Process verification test PVT: A test to be performed by the manufacturer at stated intervals to confirm, that products continue to be produced by the production process meet the requirements of the underlying technical specifications.

On-site production controls (WPK) A continuous monitoring and control of the production for each manufacturing plant/production site to be carried out by the manufacturer, at which the manufacturer ensures that the products manufactured by him comply with the underlying technical specifications. Includes BRT and PVT.

Audit test AT: A test to be performed by or on behalf of a certification body to confirm that the product continues to meet the requirements of the underlying technical specifications and to provide information to assess the effectiveness of the quality system.

Witness Testing WT: A test performed by or on behalf of the manufacturer under the supervision of an authorized representative of the certification body qualified for testing and recognized by the certification body as initial type testing and/or monitoring testing.

Group: A summary of similar products from which samples are taken for testing purposes. Certification under the present certification program is carried out according to product groups. The definition of the product groups takes into account, among other things, the grouping of the products into so-called manufacturing groups based on the nominal diameter.

Component type: Products of the same design (a pipe or fitting, a valve or its main components) made from a suitable molding compound.

Component body: The same basic body of a fitting, but with different connections.

Cavity (Nest): A part of an injection mold that gives the product its final shape by injection moulding.

Approach: Starting up (an extruder) denotes the restart of the manufacturing of pipes with an extruder after a change of the pipe dimension, the moulding batch, or similar.

Batch: Production batch means the uninterrupted production under uniform conditions of maximum 1 week. The period of production end of a batch includes the last 24 hours of production. Interruptions in production of less than 24 h (e.g. due to maintenance etc.) are not considered as interruption of the current production batch.

Production unit, Unit: A unit is a pipe coil/pipe drums resp. a straight length in the manufacturing state.

New material: Material, for example in form of granules, which has not yet been used or has not yet been subjected to any processing procedure other than that required for its manufacture and to which no circulating material, return material or recyclate has been added.

Material in circulation: Material from rejected, clean, unused pipes, fittings or valves as well as offcuts from a manufacturer's own pipe, fitting or armature production, which is reprocessed in a plant of the same manufacturer and which originates, for example, from extrusion or injection moulding processing.

External reprocessable material (return material): Material that is one of the following types:
Type A Type A material from unused pipes and fittings bearing the quality mark for plastic pipes from DIN CERTCO or similar
Type B Material from unused plastic products other than pipes and fittings.

Recyclable (recyclable material): Material that is available in one of the following types:
Type A material made from used pipes and fittings, bearing the quality mark for plastic pipes from DIN CERTCO which have been cleaned and hackled or milled.
Type B material made from other used plastic products than pipes and fittings that was cleaned and hackled or milled.

Reclaim (regenerat): Material that exists in the following types:
Type A circulating material, external reprocessable material Type A and/or recyclable Type A manufactured by compounding with the addition of additives.
Type B external reprocessable material Type B and/or recyclable Type B produced by compounding with the addition of additives.

Moulding compound (or material type) homogeneous composition of a base material (e.g. PE) and additives such as antioxidants, pigments, carbon black, UV stabilizers and other additives in a dosage required for the production and use of pipe components.

Abbreviations:
DN nominal diameter; numeric ratio for the size of a piping part, that is another, as through the size of a thread, termed piping part that has the approximate manufacturing measure, in mm.
SN nominal ring stiffness
C calculated coefficient
d_e outside diameter
d_{em} mean outside diameter
$d_{em,max}$ maximum mean outside diameter
$d_{em,min}$ minimum mean outside diameter
d_n nominal outside diameter
e wall thickness of a pipe (at any place)
e_m mean wall thickness
e_{max} maximum wall thickness (at any place)
e_{min} minimum wall thickness (at any place)
e_n nominal wall thickness
e_4 wall thickness of the inner layer
σ_{LPL} lower confidence limit of the predicted internal pressure resistance for 50 years at 20 °C
σ_S dimensioning stress
t_y wall thickness tolerance

DN/OD nominal, in regard of the outside diameter
LPL predicted lower prediction limit
MFR melt mass-flow rate
MRS minimum required strength
OIT oxidation-induction time
PE polythene
PFA permissible operating pressure
PN max. nominal pressure
R preferred number rows, based on the Renard-rows
S pipe series S following ISO 4065:1996
SDR standard dimension ratio

FM	moulding compound	D	diameter
PS	factory	AB	dimension
EG	product group	Wo	week

KA	cavity	Ar	armature
FS	fitting	ESG	fitting group
MuA	sleeve design	VA	compound execution
akt.FM	current used moulding compound		
FG	manufacturing group (also dimension group)		
WB	material label (for example PE 80 or PE 100)		
WT	material type (specific type/name)		
BT	component type (same build)		
BK	component body (same base body + for example different fittings)		
RezS	recipe for removable layer (coating)		
min.	smallest/minimum		

4 Product requirements

The requirements for plastic pipe systems (material - pipe - fitting - valve - system) in particular with regard to incoming goods inspection, material and product testing, delivery form, marking and installation instructions are explained in the respective annexes for each area of application.

5 Test

5.1 General

The certification is based on the assessment and examination of the product, as well as the appropriate quality management system as part of an inspection.

To carry out the inspections and tests necessary for the evaluation and certifications, DIN CERTCO uses test laboratories recognized by DIN CERTCO.

The scope of testing for the respective products can be found in the annexes.

The classification of product groups in the respective annex applies to the test samples to be selected.

5.2 Types of tests

5.2.1 Initial test (type testing)

The initial test relates to type testing (design test, type examination) and determines whether the product meets the requirements listed in clause 4 of this certification scheme.

The initial test is the requirement for the certification of a new product.

The test scope is determined in the respective annex or the corresponding assessment- and certification foundation. The classification of groups is to be taken into account.

The initial test is to be conducted by an accredited or DIN CERTCO recognized testing laboratory. The samples for the initial inspection can be obtained by the manufacturer.

In addition to the product-specific assessment, the initial test also includes a facility visit or inspection (see clause 8.2) to the initial inspection. As part of the initial inspection is a proof to be provided by the manufacturer that the plant’s own production control agrees (see clause 7.1) with the requirements of this certification scheme. If the product has not yet been type-

tested, the sampling for the initial test can be done during the initial inspection. The transport of the samples to the commissioned testing laboratory is the responsibility of the manufacturer.

5.2.2 Supplementary test

A supplementary test is carried out if additions, extensions or changes (see section 6.10) are made to a certified product which affect its conformity with the underlying requirements and have not been covered by the initial test.
Type and extent of the supplementary inspection is given by the respective annexes or will be determined in the individual case from DIN CERTCO in coordination with the testing laboratory. A supplementary test is usually carried out on one dimension per product group to the extent of a monitoring assessment.

The initial inspection is to be conducted by an accredited or DIN CERTCO recognized testing laboratory.

Supplementary inspections become necessary (among others) when (see also annexes):

- (M) a change in the moulding compound, for example through to a change of the material, the additives or the recipe
- (E) an extension of the product range (only for the features that are influenced by it)
- (D) a change of design, for example through change of dimensions or joining procedures (only for the features that are influenced by it)
- (P) a change in the manufacturing method (only for the features that are influenced by it)

5.2.3 Surveillance test (control test)

The surveillance test is carried out at regular, fixed intervals and is designed to establish whether the certified product in the production phase is the same as the type-tested product.

In addition to the product-specific test, the surveillance audit includes a factory visit or inspection (see paragraph 8.2), which determines whether the technical and organizational conditions for continuous conformity of the products in the respective production facility with the requirements according to clause 4 are given.

DIN CERTCO commissions or carries out the monitoring test. This is based on a surveillance contract between the certificate holder, DIN CERTCO and, if applicable, a recognized testing laboratory.

Type, extent and frequency of the monitoring tests are determined in the annexes.

The samples required for the surveillance test are taken during the respective inspection at the manufacturer's premises and/or in commercial warehouses or at the construction site. The manufacturer is responsible for transporting the samples to the testing laboratory. Care must be taken to take samples of changing dimensions, SDR series, moulding compounds and design types in order to subject all products to the third-party test over time.

In principle, only products that have been accepted and marked as faultless by the factory production control may be taken. The information on the type and number of samples taken (sampling certificates) must be submitted in writing by the respective inspector to DIN CERTCO, the production plant and the testing laboratories involved.

If products are produced and delivered by the manufacturer intermittently between the inspection visits, the necessary test samples of these parts must be stored by the company so that the full scope of the necessary surveillance tests can be carried out.

The samples for the surveillance test must be confirmed as incoming samples at the testing laboratory within four weeks. The surveillance test must be verified by a test report promptly after the date of surveillance or after receipt of the samples by the testing laboratory, if possible until the next surveillance date. If this deadline is not met, DIN CERTCO may initially suspend the certificate and delete it after a further period of 2 months.

The order of the physical tests to be performed is determined as follows:

1. Dimensions and surface
2. All other reviews, except creep tests and long term analysis
3. Creep tests and long term analysis

If negative inspection results are noticed during the surveillance test, the surveillance test can be cancelled after consultation of the manufacturer. It follows a re-examination according to clause 5.2.4.

If the result of the test is positive, the samples can be destroyed immediately. If the result of the test is negative, the rejected samples must be kept for up to three months after issue of the certificate.

5.2.4 Repeat tests

A repeat test is carried out in case of monitoring tests with negative test results. The repeat test must be initiated no later than 5 weeks after receipt of the test result. The test report must be submitted 3 weeks after completion of the tests.

The certificate owner receives besides the test result a deviation report with the corrective action that needs to be conducted and the appertaining deadline for the implementation.

For the necessary repeat test, the relevant pipe dimension that was objected to during the test must be taken. However, if the corresponding dimension is not available at the time of sampling, it is permissible to use another nominal diameter within the product group.

The type and scope of the repeat test is determined by DIN CERTCO in consultation with the testing laboratory in each individual case in accordance with the purpose.

If the deadlines specified by DIN CERTCO cannot be met by the certificate holder for technical or other reasons, the certificate holder must submit a new binding proposal for the repeat test date, stating the reasons.
If the repeat test is also not passed, certification is initially suspended and a special test is performed in accordance with clause 5.2.5.

5.2.5 Special test

A special test is carried out:

- in case of detected deficiencies
- after suspension of production over a period of more than twelve months
- at the request of DIN CERTCO, which must be justified
- at the written request of third parties (and after examination by DIN CERTCO), if they have a special interest in maintaining proper market conditions in terms of competition or quality

The type and scope of a special test is determined by DIN CERTCO in each individual case in coordination with the testing laboratory. As a rule, it is carried out to the extent of a surveillance test. The report on the special test shall
DIN CERTCO at the latest 3 weeks after completion of the test

If defects are found during a special test or if the special test is due to production being suspended, the certificate holder must bear the costs of the test procedure.

If no defects are found during special tests at the request of third parties, the costs shall be borne by the third party requesting the special test.

5.3 Sampling

The samples for the type and surveillance testing are usually taken from the manufacturer's current production or from the warehouse of the certificate holder (but only after release by the production-own quality assurance QA). The samples for the initial inspection can be taken by the manufacturer himself.

The number of samples for product testing is agreed between DIN CERTCO and the testing laboratory, unless it is specified in the valid test specifications or in the appendix.

The samples must be received by the testing laboratory no later than 4 weeks after sampling. The manufacturer/dealer shall bear the costs for sampling and shipping the samples to the testing laboratory.

If this deadline is not met, the certificate will be suspended initially and deleted after a further period of maximum 2 weeks.

5.4 Test procedure

The scope and procedure of the tests is carried out unless otherwise stated in accordance with Annexes and the normative requirements of the relevant certification requirements of section 2

5.5 Test report

The testing laboratory shall inform the client of the results of the tests in a report. The original report must be submitted to DIN CERTCO. A PDF file can also be accepted, provided DIN CERTCO receives it directly from the testing laboratory. The report must normally not be older than 6 months at the time of application. In individual cases, older test reports can also be accepted if the testing laboratory confirms in writing the validity of the information given in the test report.

The report must comply with DIN EN ISO/IEC 17025 and contain the following information as a minimum requirement:

- Name and address of the manufacturer
- Name and address of the applicant (if not the manufacturer)
- Test standards (standards and certification scheme) including date of publication
- Type of inspection (e.g. type approval, inspection examination, supplementary inspection, etc.)
- Monitoring period, as long as DIN-certified (e.g. 1st half of 2011)
- Registration number of the tested tube, as long as DIN-certified
- Pipe material

- Layer structure of multilayer pipes
- Date and place of sampling, as long as DIN-certified
- Date/Time of testing
- Test results and assessment
- Name and signature of the person responsible for the testing

6 Certification

Certification within the meaning of this certification program is the conformity assessment of a product by DIN CERTCO on the basis of product tests and inspections by DIN CERTCO or by testing laboratories and inspection bodies recognized by DIN CERTCO. The products to be certified are tested for conformity with the requirements specified in Clause 4 and subsequently monitored.
The right to use the "DIN*plus*" quality mark is granted by issuing a corresponding certificate.

6.1 Application for certification

Applicants can be either manufacturers according to § 4 of the Product Liability Act (ProdHaftG) or distributors who, in written agreement with the certificate holder, place the products on the market on their own responsibility within the meaning of the Product Liability Act.

The following documents must be submitted to DIN CERTCO by the applicant:

- Application for certification in original and with legally binding signature
- Current test report in accordance with Clause 5.5 on an initial test (see clause 5.2.1) if the test was not commissioned by DIN CERTCO
- Current inspection report about the inspection of the laboratory at the manufacturer
- Surveillance contract between the testing laboratory and the applicant (this can be submitted at the latest 3 months after the certificate was issued)
- for trader-certificates additionally legally binding declaration of the main certificate holder according to Annex A and legally binding declaration of the trader/distributor according to Annex B
- Technical data sheet

After receipt of the application, DIN CERTCO will send the applicant an order confirmation with a procedure number and information on the further procedure and any missing application documents.

6.2 Classification of types and sub-types

Plastic pipe systems and the associated materials, pipes, fittings, armatures and sealant that differ in essential certification-relevant characteristics are defined as type or model. Certification-relevant characteristics are e.g. characteristics that significantly influence safety, function or handling and are therefore sold under a separate trade name. An independent certificate is issued for each type.

As a rule, subtypes are those products of a model/type that differ from each other only in size/performance, formal or non-certification relevant characteristics. They can be combined on one certificate.

6.3 Conformity evaluation

DIN CERTCO carries out the conformity assessment on the basis of the submitted application documents. In particular, the test report is used to assess whether the product meets the requirements of the certification program and the standard.

DIN CERTCO will inform the applicant in writing of any deviations.

6.4 Certificate and rights to use the certificate

After successful examination and conformity assessment of the submitted application documents, DIN CERTCO issues a certificate to the applicant and grants the right to use the "DIN*plus*" quality mark in conjunction with an associated registration number. Providers with a valid right to use the quality mark "DIN*plus*" are also entitled to use the trademark of the KRV if the license rights are observed.

and/or

Structure of the registration number: **P1R0000**

Plastic pipe systems, for which a right to use the “DIN*plus*” quality mark has been granted shall be marked with the "DIN*plus*" quality mark and the corresponding registration number.

The mark and registration number may only be used for the type for which the certificate has been issued and which corresponds to the type-tested product.

A register number is assigned to each type. The same register number is issued for the design types (subtypes) of a type (see section 6.2).

In addition, the General Terms and Conditions of DIN CERTCO apply.

6.5 Sublicenses

In accordance with the requirements of DIN CERTCO's General Terms and Conditions, sub-certificates are required if certified products are to be placed on the market in the name of companies other than the main certificate holder.
Sub-certificates can be issued for all products covered by this certification program. They enable the marketing of certified products in the name of the sub-certificate holder. Sub-certificates depend on the validity of the main certificate. The products may not be modified by the sub-certificate holder.

The following documents must be submitted by the applicant to DIN CERTCO:

- The original application for certification with a legally binding signature
- Declaration of the sublicence holder that the products of the main certificate holder are marketed unchanged
- Declaration of consent of the principal certificate holder to the issuance of the sub-certificate

A sub certificate can be issued

- with ist own registration number
- with registration number of the main certificate holder.

6.6 Publications

All certificate holders can be viewed under <Certificate Holders> on the DIN CERTCO homepage www.dincertco.de, which is updated on a daily basis. Manufacturers, users and consumers can use this research feature in order to learn more about certified products.

In addition to the contact details of the certificate holder (phone, fax, email, Home page), the technical data of registered plastic pipe systems can be viewed and is downloaded in the form of a technical data sheet.

6.7 Validity of the certificate

The certificate is valid for 5 years. The validity period is indicated on the certificate. With the expiration of the certificate, the right to use the trademark also expires.

6.8 Extension of the certificate

If the certification is to be maintained beyond the date stated in the certificate, DIN CERTCO must receive a current positive test report and an application for extension in good time before the expiry date. DIN CERTCO carries out the conformity assessment on the basis of the application documents submitted.

Proof of compliance with the requirements of the testing and certification principles in accordance with Clause 2 is provided by a surveillance test (see section 5.2.3), which is evaluated by DIN CERTCO.

6.9 Expiry of the certificate

If the renewed check for conformity with the standard in accordance with clause 4 has not been carried out in good time before expiry of the validity period, the right of use for the "DIN*plus*" quality line and the registration number shall expire without any express notification from DIN CERTCO.

In addition, the certificate may expire if:

- the monitoring measures are mentioned in section 7 and 8 are not carried out in a timely manner or are incomplete,
- the “DIN*plus*” quality mark is used improperly by the certificate holder,
- the requirements in this certification scheme and its accompanying documents are not fulfilled,
- the resulting certification fees are not paid in due time,
- the requirements for the granting of the certificate are no longer met,

When the certificate expires, the right to use the "DIN*plus*" mark also expires automatically.

6.10 Changes/Supplements

6.10.1 Changes/Supplements to the product

The certificate holder is obliged to inform DIN CERTCO immediately of all changes made to the product. The inspection laboratory and DIN CERTCO will together decide the extent of the supplementary examination required in accordance with section 5.2.2 and whether this comprises a significant change. The inspection laboratory sends the associated test report to DIN CERTCO.

If DIN CERTCO detects a significant change, the certificate with the associated registration number shall expire. A new application for initial certification and the right to use the "DIN*plus*" quality mark may be submitted for the modified product.
The certificate holder is further obliged to notify all changes in formal details (e.g. certificate holder or his address).

The certificate holder can apply to DIN CERTCO for an extension of the existing certificate for further types of design (subtypes) of the same type. DIN CERTCO will decide whether these additions make a supplementary test necessary. If the requirements are met, the design types are included in the certificate for the already certified product and are considered to be part of it.

6.10.2 Changes to the test standard

If the test basis for certification changes, an application for a change in certification must be submitted within 6 months after notification by DIN CERTCO and, as a rule, conformity with the changed test basis must be demonstrated after 12 months by submitting a positive test report (see Section 5.5).

DIN CERTCO issues a modified certificate after positive evaluation.

6.11 Product defects

If defects are found in a certified product on the market, the certificate holder will be requested by DIN CERTCO in writing to remedy the defects.

DIN CERTCO decides in consultation with the testing laboratory whether the defect is serious or minor.

In the case of defects which directly or indirectly influence the safety-related or functional behaviour (serious defects), the manufacturer must ensure that the products are no longer marked with the certification marks until the defects have been rectified.

The defects must also be remedied immediately on products that are installed or in stock. Within 3 months, the manufacturer must prove to DIN CERTCO by submitting a test report on a special test in accordance with clause 5.2.5 that the defects have been rectified and that the product complained about again meets the specified requirements.

If the defects do not affect the safety or correct functioning of the product (minor defects), the manufacturer must use suitable means to prove to DIN CERTCO within a 3 month period that the defects affecting the product in question have been remedied.

If the manufacturer does not comply with these deadlines, the certificate and the right to use the certification mark "DIN*plus*" will be withdrawn from him and the distributor.

If there is still reason for complaint, DIN CERTCO will initially suspend the certificate and at the same time grant a final deadline for the elimination of the defects. If the certificate holder fails to comply with the request or fails to do so within the set period, or if the elimination of the defects can again not be proven, the certificate shall expire.

7 Self-monitoring by the manufacturer

An essential part of the certification is the constant monitoring of the certified product during the entire term of the certificate. The manufacturer shall ensure through appropriate quality assurance measures that the product characteristics confirmed during certification are maintained. This can be ensured by a factory production control (FPC) directly aimed at the product or the production and furthermore by measures within the scope of a quality management system (QM system) according to the standards series DIN EN ISO 9000 ff.

7.1 Factory Production Control FPC (“Werkseigen Produktionskontrolle WPK”)

Internal in-process Factory Production Control (FPC) is the continuous monitoring of the production process by the manufacturer which ensures that the products comply with the defined requirements.

The relevant records must be submitted to DIN CERTCO or its agents on request. They must at least contain the following information:

- Name of the product being inspected
- Date of production
- Date/Time of testing
- Result of testing and if applicable, comparison with the defined requirements
- Signature of person responsible for testing or authentication in electronic systems
- Date of the record

If an inspection produces a negative result the manufacturer must immediately take all action to rectify the defect. Non-conforming products must be marked and removed from the process. The inspection must be repeated at regular intervals to establish whether the defect has been rectified.
Extent and nature of the required part of the certification factory production control are described in the annexes.

7.1.1 Records

All the elements, requirements and provisions adopted by the manufacturer shall be documented in a systematic manner in writing. This documentation of the production control system must ensure a common understanding of the conformity assessment and enable the achievement of the required component characteristics and the verification of the effective operation of the production control system.

The FPC (WPK) therefore combines operating procedures as well as all measures that enable the maintenance and verification of conformity of the component with its technical specifications. It can be implemented by means of inspections and tests on raw materials and components, processes, production equipment and finished components, including their material properties, and by applying the results thus obtained.

The results of inspections, test procedures or assessments requiring action shall be recorded, as well as the action taken. The actions required when control values or criteria are not met shall be recorded and retained for a period specified in the manufacturer's FPC (WPK) system.

The specifications of all delivered raw materials and components shall be documented and the test plan for ensuring their conformity shall be implemented.

All relevant records shall be presented to DIN CERTCO or its authorized representatives upon request. They must contain at least the following information:
- Name of the product being inspected
- Date of production
- Date/Time of testing
- Result of testing and if applicable, comparison with the defined requirements
- Signature of person responsible for testing or authentication in electronic systems
- Date of the record

7.1.2 Personnel

The responsibility, authority and relationship between the personnel who direct, perform or monitor the work affecting product conformity must be defined. This applies in particular to personnel who take action to prevent products from being non-compliant and, if they are not compliant, to identify and document problems of product conformity.

Personnel who carry out work relating to product conformity must be competent, based on appropriate education, training, skills and experience. The competence of the personnel must be documented.

7.1.3 Equipment

All weighing, measuring and test equipment necessary to achieve or demonstrate conformity shall be calibrated or verified and periodically checked according to the procedures, frequencies and criteria laid down.

The control of the monitoring and measuring equipment must comply with the relevant sections of DIN EN ISO 9001.

All equipment used in the manufacturing process must be regularly inspected and maintained to ensure that use, wear and tear or failure do not lead to irregularities in the manufacturing process.

Inspections and maintenance shall be carried out and recorded in accordance with the manufacturer's written procedures and the records shall be retained for the period specified in the manufacturer's FPC (WPK) procedures.

7.1.4 Raw materials and components

The specifications of all of supplied raw materials and components as well as the monitoring scheme for ensuring their conformity must be documented.

The verification of conformity of the raw material with the specifications must match DIN EN ISO 9001 section 7.4.3.

7.1.5 Production control

The manufacturer must plan and carry out production under controlled conditions.

The requirements of this subsectionto be regarded as fulfilled, when in accordance with the DIN EN ISO 9001 sections 7.5.1 and 7.5.2.

7.1.6 Traceability and labelling

Individual products and product-batches must be identifiable and traceable with respect to their origin. The manufacturer must have laid down procedures in writing to ensure that the processes for the fixing of traceability codes and / or identifiers are checked regularly.

The requirements of this subsection are to be considered as fulfilled in accordance with the DIN EN ISO 9001 section 6.5.3.

All products are to be permanently marked with the minimum amount of information. The required minimum need is to be found in the respective annexes.

If a certificate of conformity (DIBt) is issued by the certification body DIN CERTCO, the parts must also be marked with the approval number. In addition, the marking with the Ü-mark must be carried out.

7.1.7 Non-compliant products

The manufacturer shall establish in written procedures how non-compliant products shall be treated. All such events shall be recorded as soon as they occur and these records shall be retained for the period specified in the manufacturer's written procedures.

The requirements of this Subpart shall be regarded as fulfilled, when in accordance with DIN EN ISO 9001 clause 8.3.

7.1.8 Corrective action

The manufacturer shall document procedures indicating the measures to be taken to eliminate the cause of non-conformity and to prevent recurrence.

The requirements of this Subsection shall be considered as fulfilled, when in accordance with DIN EN ISO 9001 clause 8.5.2.

7.1.9 Handling, storage and packaging

The manufacturer shall establish procedures for the handling of the products that are already present and provide suitable storage facilities to prevent their damage or deterioration.

7.2 Quality management system

DIN CERTCO recommends the implementation and certification of a quality management system according to the DIN EN ISO 9000 ff. standards

8 External monitoring by DIN CERTCO

8.1 General

In addition to the self-monitoring of the certificate holder, the quality assurance of the products is supported by the external monitoring by DIN CERTCO. DIN CERTCO checks and evaluates the conformity of the product with the requirements specified in the certification program and, if necessary, the effectiveness of the factory production control according to clause 7.1..

After successful type testing, initial inspection and issue of a certificate, external monitoring in the form of surveillance testing (clause 8.2) is carried out at regular intervals. The third party surveillance comprises factory inspections (see clause 8.1) as well as product-specific tests (see Appendices).

8.2 Inspections

In the course of an inspection DIN CERTCO or a third party commissioned by DIN CERTCO checks the production and testing facilities and the quality assurance measures (QA measures) to ensure that they are suitable for the proper manufacture of the product. The inspection takes place every six months.

The inspection also serves to determine whether the technical and organizational prerequisites for the continuous conformity of the products with the requirements according to clause 4 are given.

The client will be informed of the result of the inspection in a separate inspection report. This report must be submitted to DIN CERTCO in the original and comply with the requirements of DIN EN ISO/IEC 17020, clause 13.

If the results of the inspection are not sufficient, the production site and the applicant must be informed immediately. The scope of additional corrective measures to meet all requirements must then be agreed between the certification body and the applicant. If the applicant is not able to implement the necessary measures, the procedure shall be terminated.

8.3 Monitoring tests (control tests)

The monitoring shall take place within the nature and scope according to the section 5.2.3 and the respective Annexes.

Annex A Manufacturer declaration

DIN CERTCO Gesellschaft
für Konformitätsbewertung mbH
Alboinstraße 56
D-12103 Berlin

DECLARATION MANUFACTURER

Herewith, we declare:

Comapany: _____
Street: _____
Postal code/city: _____

That we agree that our certified plastic piping systems with the

Type name: _____
Registration No.: _____

Can be used for the certification of the following supplier/distributer

Company: _____
Street: _____
Postal code/city: _____

Under the following

Type name: _____

We furthermore agree that the supplier/distributor mentioned above, is permitted to apply for a certificate on his own with a separate registration number on the basis of our valid DIN-certification.

DIN CERTCO is permitted to use our available test reports and further certification relevant documents for the conformity assessment.

We furthermore confirm that we will only deliver such products to the applicant, which are identical in construction to those which are certified by us under the registration number mentioned above.

All certification relevant changes according to the current valid certification scheme will be immediately notified in writing by us to DIN CERTCO and the supplier/distributor.

_____ _____
Date Company stamp and legally binding signature

Annex B declaration Supplier/Distributor

DIN CERTCO Gesellschaft
für Konformitätsbewertung mbH
Alboinstraße 56
D-12103 Berlin

Declaration SUPPLIER/DISTRIBUTOR

We herewith declare as supplier/distributor

Company: _____
Street: _____
Postal code/city: _____

that the plastic piping systems which are distributed by us under the following

Type name: _____

produced by the manufacturer/certificate holder

Company: _____
Street: _____
Postal code/city: _____

and the registration No.: _____

for which we have applied for DIN-certification are identical in construction to those products which are certified by the manufacturer/certificate holder under the registration number mentioned above.

We furthermore confirm that we will not do any changes to those products supplied by the manufacturer or that we will purchase other products with the same registration number.

_____ _____
Date Company stamp and legally binding signature

Annex C Test describtion

C 1 Homogeneity (carbon black-/ Pigment dispersion)

The test is to be carried out according to ISO 18553.

Requirement:
The carbon black and pigment dispersion may not exceed class 3.
The texture must be semilar to the nominal dispersion A1, A2, A3 or B.

Test:
The carbon black dispersion for black material and the pigment dispersion for coloured, not black material is to be tested according to ISO 18553.

At least one microtome section is to be taken transverse to the pipe axis from each of the three samples (pipe sections) of a production batch and checked for compliance with the requirements.

C 2 Creep modulus

Requirement:
The creep modulus must reach the following values when testet according to method A and/or method B:

1-Minute-Creep modulus	$E_{bc(1min)}$	= 800 N/mm²
24-h- Creep modulus	$E_{bc(24h)}$	= 380 N/mm²
2000-h- Creep modulus	$E_{bc(2000h)}$	= 250 N/mm²

For the material type approval in addition to the 1-Minute- Creep modulus and the 24-h- Creep modulus also the 2000-h-Creep modulus $E_{bc(2000h)} \geq 250$ N/mm² must also be verified on pipes. This proof may be provided by the raw material manufacturers, if the test on pipes has been carried out by a DIN CERTCO recognized testing laboratory and the test certificate has been submitted to DIN CERTCO.

Test:
Procedure B is preferred if the wall thickness allows the production of a test bar.

Method A
The test is carried out on pipe sections (external monitoring on 3 samples and factory production control on 1 sample), whose length is twice as longequal to the inner diameter of the pipe ($l = 2\ d_i$, $l_{max} = 1$ m). The test temperature is (23 ± 2) °C. The force is applied perpendicular to the pipe axis linearly on the pipe crown over the entire length of the pipe section. The support to be used is shown in figure 1; its length is equal to the length l of the pipe section. The distance e between the two angle steels must not be greater than 0.05 d_i.

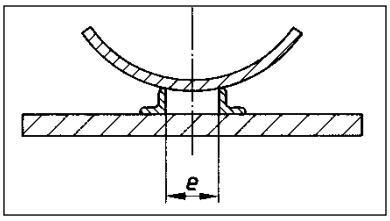

Fig. 1: bedding method A

Before applying the force, the inside diameter and wall thickness of the pipe section shall be measured at a distance of 0.2 d_i, but not more than 50 mm, from the ends of the pipe section and in its center. The measuring points shall be marked before the measurement is started. The average values d_i and s_1 from three measurements each are given.

The pipe section is then continuously and shock-free loaded within 10 s up to test load F in such a way that an initial deformation $\Delta d_{iv}/d_i$ of 1 % is produced.

The inner diameter change $\Delta d_{iv\,f}$ for the 1-Minute-creep modulus $E_{bc(1min)}$ is determined 60 s, the inner diameter change div for the 2000-h creep modulus $E_{bc(2000h)}$ is determined 2000 h after application of the test load. The mean change in inner diameter $\overline{\Delta d}_v$ is determined as the mean value of three measurements. The creep modulus $E_{bc(t)}$ is calculated according to the following formula:

$$E_{bc(t)} = \frac{12 \cdot \xi \cdot F}{\overline{\Delta d}_{iv} \cdot l} \cdot \left(\frac{\overline{d}_i + \overline{s}_1}{2\overline{s}_1} \right)^3$$

Where mean:

$E_{bc(t)}$	creep modulus in N/mm²
ξ	Deformation coefficient (see Table 1-1)
F	Test load in N
$\overline{d}_i$	average inner diameter in mm
$\overline{s}_1$	average wall thickness in mm
$\overline{\Delta d}_{iv}$	average inner diameter change in mm
l	Length of pipe section in mm

Table 1: Deformation coefficient

Deformation $\overline{\Delta d}_{iv}$ / $\overline{d}_i$ **%**	ξ
0	0,1488
1	0,1508
2	0,1528
3	0,1548
4	0,1568
5	0,1588
6	0,1608
7	0,1628
8	0,1648
9	0,1668
10	0,1688
11	0,1708
12	0,1728
13	0,1748
14	0,1768
15	0,1788

Intermediate values are to be interpolated linearly

Method B

The method B is only suitable for pipes, whose wall thicknesses allow the taking of test specimens acc. to picture 2.

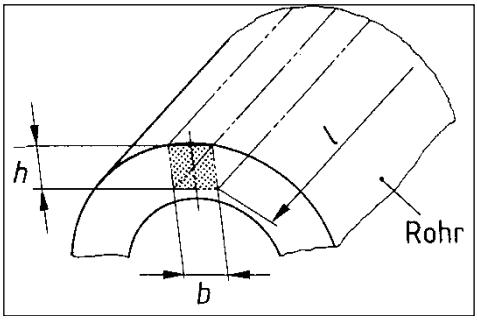

Fig. 1: test specimen for method B

The test is carried out on test bars which are taken in the longitudinal direction of the pipe axis as close as possible to the outside of the pipe wall.

The test bars (see Figure 2), whose surfaces are to be machined plane-parallel, must have the following dimensions:

Length l	=	(120 ± 2) mm
Width b	=	(10 ± 0,5) mm
Height h	=	(10 ± 0,5) mm

Measure the width of the test specimen [b] and the height of the test specimen [h] at several points, rounding the mean value to 0.01 mm. When performing the test, the tensile zone corresponds to the outer layer of the tube.

The creep modulus is determined in 4-point bending test according to DIN 16841.

A bending stress of 2 N/mm² is applied within 10 s and then, after a further minute, the deflection $f_{(1min)}$ is determined. The 1-Minute-Creep modulus $E_{bc(1min)}$ is calculated using the following formula:

$$E_{bc(t)} = \frac{1}{f_{(1\,min)}} \cdot \frac{M_b}{b} \cdot C$$

Where mean:

$E_{bc(1min)}$	1-Minute-Creep modulus in N/mm²
$f_{(1min)}$	test specimen deflection in mm (of 0.01 mm)
M_b	bending moment in Nmm
b	width of test specimen in mm
C	Factor, that is dependent on the height h of the test specimen, in 1/mm

The bending moment M_b is calculated as follows:

$$M_b = \sigma_b \cdot W \quad \text{mit} \quad W = \frac{h^2 \cdot b}{6}$$

Where mean:

M_b	bending moment in Nmm
σ_b	bending stress in N/mm² (hier: σ_b = 2 N/mm²)
W	Modulus of resistance in mm³
h	height of test specimen in mm
b	width of test specimen in mm (here: b = 10 mm)

The factor C is calculated using the elasticity theory, as follows:

$$C = \frac{3}{2 \cdot h} \cdot \left(\frac{l'^2}{h^2} - \mu \right)$$

Where mean:

C	Factor in 1/mm
h	height of test specimen in mm
l'	Clamping length of the measurements bracket in mm (here: l' = 60 mm)
µ	Poisson´s ratio (for plastics µ = 0.4)

After measurement of $f_{(1min)}$ and calculation of $E_{bc(1min)}$ the increase in deflection is observed under the effect of the constant bending stress of 2 N/mm² and the deflection f(t) is determined after 24 and 2000 hours of loading.

The creep modulus of 24- and 2000 hours will be calculated using the following formula:

$$E_{bc(t)} = E_{bc(1min)} \frac{f_{(1min)}}{f_{(t)}}$$

Annex D ZP 14.3.1 - DA Pressure pipes made from polyethylene (PE) for industry/general – PE 80, PE 100, PE 100-RC

(Edition: 17.03.2015)

D 1 Inspection and certification principles (also refer to section 2):

DIN 8074	Polyethylene (PE) pipes - PE 80, PE 100 - Dimensions; DIN 8074:2011-12
DIN 8075	Polyethylene (PE) pipes - PE 80, PE 100 - General quality specifications; DIN 8075:2011-12
PAS 1031	Polyethylene (PE) as a material for the manufacture of pressure pipes and fittings; PAS1031:2004-09
ZP 14.23.39	Polyethylene pipes for alternative laying techniques
E DIN EN ISO 15494	Plastic piping systems for industrial applications - Polybutylene (PB), polyethylene (PE) and polypropylene (PP) - Specifications for pipeline components and the pipeline system (draft); German version prEN ISO 15494:2013-04
DIN EN 10204:2005-01	Metallic products - Types of inspection documents; German version EN 10204:2004
KTW guidelines	Guidelines for the hygienic assessment of organic materials in contact with drinking water (KTW guidelines); KTW guidelines:2008-10

Table D 1 Quality enhancement

Requirements	CS 14.3.1 DA	DIN 8074	DIN 8075	DIN EN ISO 15494	Refer to:
Participation in the Plastic Pipe Association (KRV) recycling system	+	-	-	-	Section 1.2
Materials must be listed as pipe or strip material in the KRV material lists	+	-	-	-	Annex D

D 2 General

Annex D (ZP 14.3.1 DA) of this certification scheme applies to seamless pressure pipes made from PE 80, PE 100 or PE 100-RC, general application, with homogeneous as well as multi-layer wall structures and, in association with sections 1 to 7, contains all the requirements for the award of the "DIN*plus*" quality mark for plastic piping systems. The quality enhancement is summarised in Table D 1.

The dimensions of industrial/general grade pressure pipes made from PE 80, PE 100 or PE 100-RC must conform to DIN 8074 or DIN EN ISO 15494. If the pipes meet the requirements of the KTW guidelines and are marked with the application designation DW (to indicate that they are suitable for drinking water), they can be used as drinking water pipes.

D 3 Product groups

The product groups (based upon DIN EN 12201-7 Table 1) are shown in Table D 2. Certificates are issued per product group and product type if all requirements are met.

Table D 2 Product groups

Product group	Product type	Nominal diameter (DN/OD)
920	Pipes with a single and multi-layer wall structure with/without a strippable layer (protective layer)	d < 75 mm
921		75 mm ≤ d < 250 mm
922		250 mm ≤ d < 710 mm
923		710 mm ≤ d < 1800 mm
924		1800 mm ≤ d ≤ 2500 mm

D 4 Substance / materials used

The material used polyethylene PE 80, PE 100 or PE 100-RC must conform to DIN 8075. Furthermore, the material PE 100-RC must conform to the certification scheme CS 14.23.39 or comparable requirements.

The pipe manufacturer may only make pipes from types of materials (mixtures, layered material, strip material) which are listed or verified in the KRV material lists and for which it has passed a type test in accordance with section5.2.1 or a supplementary test in accordance with 5.2.2 of this certification scheme via DIN CERTCO for each production centre.

The composition of the granulate mixture for the approved pipe is to be submitted to DIN CERTCO for filing. All the additives used must be distributed evenly. None of the additives may adversely affect the manufacture or weldability of the pipeline parts either on their own or with other additives, nor may they compromise the chemical, physical or mechanical properties specified in this standard.

Only granulate mixtures of the same MRS class or only RC materials (i.e. same material designation) may be mixed. The pipe manufacturer must confirm that it does not object to this.

Substance types, which have been approved for the respective production centre, with the same material designation and same MRS class may be combined in the co-extrusion process.

In the case of multi-layer pipes in which all the layers are made from PE, the outer layer is a signal layer provided it does not exceed 10 % of the nominal wall thickness. Pipes with a signal layer must be type-tested. The suitability of material types which have not been used so far for the base pipe is determined through type testing. The suitability of material types which have not been used so far for the signal layer is determined by a monitoring test conducted as part of external monitoring.

New material is to be used for the manufacture of the pipes. The use of work-in-progress material from the same PE moulding compound is permissible. Reclaimed material, regenerated material and recycled material may not be used.

D 5 Delivery form

The pipes are supplied in straight lengths, as coiled bundles and drum goods. The design length is to be specified by the manufacturer.

D 6 Processing and laying guidelines

The pipe manufacturer is required to issue supplementary information about laying in the case of laying measures which go over and beyond the specifications of the DIN standards, DVGW worksheets and KRV laying instructions.

Table D 3 Minimum marking of the pipes

Designation	Sample marking
Name and/or trademark of the manufacturer	xyz
Quality mark for plastic pipes with a register number	P1R0000
KRV trademark	[1]
Product standard	DIN EN ISO 15494
Material and designation	PE 100
Nominal outer diameter d_n	110
Nominal wall thickness e_n or pipe series S or SDR series or nominal pressure PN	110 S 5 or SDR 11 PN 10
Intended use	DA TW
Manufacturer's details (by name or encrypted) Production period (year + month) Production centre (if there are more than one)	 11/2012 Berlin

[1] observing licensing rights

D 7 Minimum marking

All the pipes are to be marked continuously and permanently (embossing/laser) - at intervals of about 1 m - with the minimum information indicated in Table D 3. Pipes which conform to the KTW guidelines can be marked with the application designation "TW" (to indicate that they are suitable for drinking water).

D 8 Material/goods inward check

The material tests (TT, BRT/PVT, AT) are grouped in Table D 4.

Table D 4 Material test (per moulding compound)

Property		Require-ments for	Requirement (Parameter)	Type test (TT)	Internal monitoring (BRT/PVT)		External monitoring (AT)
				Initial type testing (ITT)	Test confirmation (according to DIN EN 10204)	Spot checks	
Classification / MRS value (Verific. of long-term strength)		PAS 1031 ISO 15494	above the reference characteristic; MRS (20°/50J) ISO9080/ISO12162: PE 80 ≥ 8 MPa; PE 100 ≥ 10 MPa	The materi-als are type-tested by the material manufac-turer.	Factory confirmation 2.1		The materials undergo monitoring tests by the material manufacturer. Sampling can take place at the pipe manufacturer ("funnel sample")
Density		PAS 1031 ISO 15494	≥930 kg/m³ (23 °C)		Acceptance test certificate 3.1		
Colour		PAS 1031 ISO 15494	consistent; preferably black		Factory confirmation 2.1		
Dry loss: volatile matter or moisture content [a]		PAS 1031 ISO 15494	≤ 350 mg/kg ≤ 300 mg/kg		Acceptance test certificate 3.1	X	
MFR melt flow index		PAS 1031 ISO 15494	0.2-1.4 g/10 min ± 20 % (5 kg;190 °C)		Acceptance test certificate 3.1	X	
Thermal stability (OIT)		PAS 1031 ISO 15494	≥20min (200 °C;15 ± 2 mg; O2)		Acceptance test certificate 3.1		
Homogeneity (soot dispersion)		PAS 1031 ISO 15494	≤ grade 3; Cl. A1,A2,A3,B		Factory certificate 2.2		
Homogeneity (pigment disp.)		PAS 1031 ISO 15494	≤ grade 3; Cl. A1,A2,A3,B		Factory certificate 2.2		
Resistance to slow crack growth (SCG) [b]		PAS 1031 ISO 15494	no failure (d_n 110; SDR11; 80 °C; 500 h; water/water;8/9, 2 bar)		Factory confirmation 2.1		
Resistance to rapid crack propagation (RCP) [b]		PAS 1031 ISO 15494	no failure (d_n 110;SDR11; 0 °C; air; p_c >1.5 PN)		Factory confirmation 2.1		
Weather-resistance (WB), black mat.: soot content [b]		PAS 1031 ISO 15494	2-2.5 % by weight		Factory certificate 2.2		
Weather-re-sistant col-oured mate-rial (after weathering ≥ 3.5 GJ/m²) [b]	Creep int.	PAS 1031	> 1000h (80 °C;4/5 MPa; water/water)		Factory confirmation 2.1		
	Elongation at break	PAS 1031	≥ 350 % (100/50/25/10 mm/min)				
	Peel strength of heating coil welded joint	DIN EN 12201-1	≤ 33 % brittle fracture (d_n 110; 23 °C)				
Influence on the quality of wa-ter [c] (where necessary)		PAS 1031 DVGW W 270 KTW guidelines	Positive list/ Odour and taste test / Mi-crobiological test		Acceptance test certificate 3.1 / Factory confirmation 2.1		

[a] only to be verified if the requirement for volatile matter is not met.
[b] Does not apply to material in strips
[c] only for drinking water application

D 9 Pipe / system tests

The pipe tests (TT, BRT/PVT, AT) are grouped in Table D 5.

Table D 5 Pipe tests

Property [c]		Require-ment for	Requirement (Parameter)	Type test (TT) per moulding compound				Internal monitoring (BRT/PVT)	External monitoring (AT)
				Testing to be conducted at [a, b]				Factory production control [see 7.1]	Monitoring test [see 5.2.3]
				N (ITT)	D	M	E		
Condition		ISO 15494	smooth, clean, free from bub-bles/scores Ends of pipes: vertical, burr-free	1x / PG	X	X	X	1x / startup and every 8 hours	1x / half-year / PG / PS [j]
Colour		ISO 15494	consistent; preferably black	1x / PG	X	X	X	1x / startup and every 8 hours	1x / half-year / PG / PS [j]
Influence on the quality of water (where necessary)		KTW guidelines PAS 1031	Positive list; odour and taste test	1x / PG	-	X	-		1x / half-year [j]
Geometric proper-ties		ISO 15494	(after 4 h at 23 °C) out-of-roundness/ diameter/ wall thicknesses/ bound-ary dimensions/ etc.	1x / PG	-	X	X	1x / startup and every 8 hours	1x / half-year / PG / PS [j]
Creep in-ternal pressure behaviour	20°C >100 h	ISO 15494	(3 samples) >100 h (20 °C;10/12MPa; water/water)	1x / PG920-922 (PG923,924: [i])	-	X[g]	X		
	80°C >165h	ISO 15494	(1 sample) >165 h (80 °C;4.6/5.4 MPa; water/water)					PG920-922: 1x / batch (PG923,924 by agreement)	
	80°C >1000h	ISO 15494	(3 samples) >1000 h (80 °C;4/5 MPa; water/water)	1x / PG920-922 (PG923,924: [i]) [h]	-	X[g]	X	PG920-922[f]: 1x/year/MC/PS /PG (PG923,924 by agreement) [h]	1x / half-year / on1 PG / PS[h, j]
Elongation at break		DIN EN 12201-2	(Number of samples in accordance with EN ISO 6259-1) ≥ 350 % (100/50/25/10 mm/min)	1x / PG	-	X[g]	X	1x / batch [d] (at least 1x / year / MC / PG / PS)	1x / half-year / PG / PS [j]
Thermal stability (OIT)		ISO 15494	for each layer: ≥20min (200 °C;15 ± 2 mg; oxygen)	1x / PG	-	X	-	1x / batch	1x / half-year / PG / PS [j]
Melt flow rate (MFR)		ISO 15494	0.2-1.4 g/10 min ± 20 % (5 kg;190 °C)	1x / PG	-	X	X	1x / batch [d]	1x / half-year / PG / PS [j]
Longitudinal shrink-age (only for e≤16mm)		ISO 15494	≤3% / original condition (110 °C; 200 mm; 60/120 min)	1x / PG	-	X	X	1x / PG / year / MC / PS	1x / half-year / PG / PS [j]
Marking		ISO 15494	see Table D 3	1x / DN [i]	-	X	-	1x / startup and every 8 hours	1x / half-year / PG / PS [j]
Homogeneity (soot/ pigment dispersion)		PAS 1031	(3 samples) ≤ grade 3; Cl. A1, A2, A3 or B	1x / PG		X		1x / week / extruder, as well as with any change in moulding compound and	1x / half-year / PG / PS [j]

Property [c]	Require-ment for	Requirement (Parameter)	Type test (TT) per moulding compound				Internal monitoring (BRT/PVT)	External monitoring (AT)
			Testing to be conducted at [a, b]				Factory production control [see 7.1]	Monitoring test [see 5.2.3]
			N (ITT)	D	M	E		
							with a negative creep internal pressure test	
Additional tests for co-extruded pipes [e]								
Structural integrity after deformation	DIN EN 12201-2 B0.7		1x / PG	-	X	X	1x / year / MC / PS / PG	
Layer separation	DIN EN 12201-2 B.6						1x (after a creep test or elonga-tion-at-break test)	1x (after a creep test or elongation-at-break test) [j]
Additional tests for pipes with a strippable layer [e]								
Weather-resistance	DIN EN 12201-2 C.3	3 x elongation at break; 3 x creep; 1 x peel strength	1x / layer rec.	X	X	-		
Resistance to rapid crack propagation (RCP)	DIN EN 12201-2 C.3	(Number of samples acc. to EN ISO 134877/13478) including strippable layer: critical pressure at 250/500mm SDR 11	1x / MC [i]	X	X	-		
Resistance to slow crack growth (SCG)	DIN EN 12201-2 C.3	(3 samples) including strippable layer: dn 110mm SDR 11	1x / MC [i]	X	X	-		

[a] N: New system [initial test, see section 5.2.1] M: Change of moulding compound [supplementary test, see section 5.2.2]
E: Extension of the product range [supplementary test, see section 5.2.2] D: Change of design [supplementary test, see section 5.2.2]

[b] Successful test validates pipes with a smaller d_n within the product group. Additional type tests have to be performed if the product range is extended.

[c] All the properties with the exception of the marking apply to the base pipe of pipes with a strippable layer which are without this layer. Condition, colour, weather-resistance and marking also apply to the pipes with a strippable layer, including this layer.

[d] Test is required when using work-in-progress materials from the same moulding compound. Test does not apply when using 100% new materials. Applies to all layers of co-extruded pipes during the MFR test. Moreover (and if not already tested in the BRT) X / year / PG / MC / PS within the scope of PVT

[e] In the case of single-layer and co-extruded pipes, RCP and SCG are covered by the use of moulding compound (MC) from the KRV list.

[f] Product group 33, only one sample necessary

[g] Sampling process for one diameter

[h] d_n<250 mm: 3 sample items; $d_n \geq 250$ mm: 1 sample item; or by agreement with the monitoring centre/ indirect test in accordance with a study.

[i] by reviewing the test results of the manufacturer

[j] If there are no negative results three times in a row, the monitoring frequency is set to once a year. If there are negative results, the monitoring frequency of the PG is restored.

D 10 Number of samples

The number of samples to be taken for the monitoring test is shown in Table D 6.

Table D 6 Minimum number of samples to be taken for the monitoring test (type test may require more samples)

Product group (see section 4.1)	**Mechanical/physical examinations**		**Hygiene examinations** Number of samples and length
	Number of samples	Length L per sample	
920(<75mm)	6 + 3 retained samples	L = 5 × outer Ø + 250mm (500 mm < L < 1200 mm applies)	$d_e \leq$ 32mm: 10 x 1m 32 mm < $d_e \leq$ 50 mm: 6 x 1 m 50 mm < d_e : 6 x 0.5 m
921 (<250 mm)	6 + 3 retained samples	1200 mm	
922 (<710 mm)	6 + 3 retained samples	1200 mm	
923 (<1,800 mm)	6 + 3 retained samples	1200 mm	
924 (≥1,800 mm)	6 + 3 retained samples	1200 mm	

D 11 Consequence in the event of deviations

As a rule, products which do not meet the specified requirements are to be rejected. Further conclusions apply to individual requirements about quality assurance.

Classification (initial test):
For each failure where t<165 hours with a ductile fracture, testing on a sample from the same production batch (dimensions, extruder, production date) must be repeated with the test conditions 80°C/>165h. In the entire random sample, there may be a maximum of one failure with t<165 hours or t<1000 hours with brittle fracture. If this is the case, 10 further samples must be tested from the same production batch. No further failure of t<165 hours or t<1000 hours may occur.

Creep inner pressure behaviour:
If a creep fracture is discovered during testing prior to the minimum service life and if this is a ductile fracture (strain fracture), testing is to be conducted on three other pipe samples from the same production batch (dimensions, extruder, production date) with a reduced test tension (in accordance with DIN EN ISO 15494). The minimum service life must be duly met by all three samples. If this is not passed, re-testing must be initiated.

MFR melt flow rate index:
If the measurement result of the MFR value deviates from the material inward value and from the measurement on the pipe by more than 20 %, a monitoring test must be performed immediately on the granulate from the respective reservoir of the processing machine(s). If a deviation in excess of 20 % is discovered in turn, the production volume affected is to be rejected. These pipes may no longer be used as work-in-progress materials for pressure pipes.

Longitudinal shrinkage (change after hot storage):
If the requirement is not met, testing must be repeated immediately on the pipes manufactured previously from the same extruder. If the re-test is not passed either, the production volume concerned must be rejected, and the testing frequency must be extended to once a week per extruder, as well as during any startup. If no deviations are discovered after a period of two months, the specified frequency can be restored.

Homogeneity:
If inhomogeneities > 0.02 mm², such as bubbles, cavities and foreign bodies, are discovered, testing is to be extended to a further three test items. If inhomogeneities > 0.02 mm² are discovered once again during this testing, the production volume concerned is to be rejected.

Annex E ZP 14.3.1 AW - Pressure pipes made from polyethylene (PE) for sewage – PE 80, PE 100, PE 100-RC

(Edition: 17.03.2015)

E 1 Inspection and certification principles (also refer to section 2)

DIN 8074	Polyethylene (PE) pipes - PE 80, PE 100 - Dimensions; DIN 8074:2011-12
DIN 8075	Polyethylene (PE) pipes - PE 80, PE 100 - General quality specifications; DIN 8075:2011-12
PAS 1031	Polyethylene (PE) as a material for the manufacture of pressure pipes and fittings; PAS1031:2004-09
ZP 14.23.39	Polyethylene pipes for alternative laying techniques
DIN EN 12201-1	Plastic piping systems for water supply, and for drainage and sewerage under pressure - Polyethylene (PE) - Part 1: General; German version EN 12201-1:2011-11
DIN EN 12201-2	Plastic piping systems for water supply, and for drainage and sewerage under pressure - Polyethylene (PE) - Part 2: Pipes; German version EN 12201-1:2011-11
DIN EN 12201-5	Plastic piping systems for water supply, and for drainage and sewerage under pressure - Polyethylene (PE) - Part 5: Fitness for purpose of the system; German version EN 12201-5:2011-11
FprCEN/TS 12201-7	Plastic piping systems for water supply, and for drainage and sewerage under pressure - Polyethylene (PE) - Part 7: Guidance for the assessment of conformity; German version EN 12201-7:2013-04
DIN EN 10204	Metallic products - Types of inspection documents; German version EN 10204: 2004

E 2 General

Annex E (ZP 14.3.1 AW) of this certification scheme applies to seamless pressure pipes made from PE 80, PE 100 or PE 100-RC, with homogeneous as well as multi-layer wall structures which are used for sewage and, in association with sections 1 to 7, contains all the requirements for the award of the "DIN*plus*" quality mark for plastic piping systems. The quality enhancement is summarised in Table E 1.

Sewage pressure pipes made from PE 80 and PE 100 are to be used preferably in SDR 11 and SDR 17 in accordance with DIN 8074 or DIN EN 12201-2. Further SDR series in accordance with DIN 8074 and DIN EN 12201-2 are permissible. At operating temperatures > 20 °C, the permissible operating pressures in accordance with DIN 8074 are to be observed.

Table E 1 Quality enhancement

Requirements	ZP 14.3.1 AW	DIN 8074	DIN 8075	DIN EN 12201	Refer to:
Participation in the Plastic Pipe Association (KRV) recycling system	+	-	-	-	Section 1.2
Materials must be listed as pipe or strip material in the KRV material lists	+	-	-	-	Annex E
Creep modulus $E_{bc(1min)}$ ≥ 800 N/mm² $E_{bc(24h)}$ ≥ 380 N/mm² $E_{bc(2000h)}$ ≥ 250 N/mm²	+	-	-	-	Annex E

E 3 Product groups

The product groups (based upon DIN EN 12201-7 Table 1) are shown in Table E 2.

Table E 2 Product groups

Product group	Product type	Nominal diameter (DN/OD)
31	Pipes with a single and multi-layer wall structure with/without a strippable layer (protective layer)	d < 75 mm
32		75 mm ≤ d < 250 mm
33		250 mm ≤ d < 710 mm
34		710 mm ≤ d < 1800 mm
35		1800 mm ≤ d ≤ 2500 mm

E 4 Substances / materials used

The material used polyethylene PE 80, PE 100 or PE 100-RC must conform to DIN 8075. Furthermore, the material PE 100-RC must conform to the certification scheme CS 14.23.39 or comparable requirements.

The pipe manufacturer may only make pipes from types of materials (mixtures, layered material, strip material) which are listed or verified in the KRV material lists and for which it has passed a type test in accordance with section5.2.1 or a supplementary test in accordance with 5.2.2 of this certification scheme via DIN CERTCO for each production centre.

The composition of the granulate mixture for the approved pipe is to be submitted to DIN CERTCO for filing. All the additives used must be distributed evenly. None of the additives may adversely affect the manufacture or weldability of the pipeline parts either on their own or with other additives, nor may they compromise the chemical, physical or mechanical properties specified in this standard.

Only granulate mixtures of the same MRS class or only RC materials (i.e. same material designation) may be mixed. The pipe manufacturer must confirm that it does not object to this.

Substance types, which have been approved for the respective production centre, with the same material designation and same MRS class may be combined in the co-extrusion process.

In the case of multi-layer pipes in which all the layers are made from PE, the outer layer is a signal layer provided it does not exceed 10 % of the nominal wall thickness. Pipes with a signal layer must be type-tested. The suitability of material types which have not been used so far for the base pipe is determined through type testing. The suitability of material types which have not been used so far for the signal layer is determined by a monitoring test conducted as part of external monitoring.

New material is to be used for the manufacture of single-layer pipes. The use of work-in-progress material from the same PE moulding compound is permissible. The PE moulding compound for the pipe manufacture must conform to DIN EN 12201-1. Reclaimed material, regenerated material and recycled material may not be used.

New material is to be used for the manufacture of multi-layer pipes. Work-in-progress material from co-extruded pipes may be used for co-extruded pipes which are not intended for the transport of drinking water provided all the requirements of DIN EN 12201-2 are met. Reclaimed material, regenerated material and recycled material may not be used.

E 5 Delivery form

The pipes are supplied in straight lengths, as coiled bundles and drum goods ($D_{in} > 18\ d_n$ in conformity with DIN EN 12201-2).

E 6 Processing and laying guidelines

The pipe manufacturer is required to issue supplementary information about laying in the case of laying measures which go over and beyond the specifications of the DIN standards, DVGW worksheets and KRV laying instructions.

E 7 Minimum marking

All the pipes are to be marked continuously and permanently (embossing/laser) - at intervals of about 1 m - with the minimum information indicated in Table E 3.

Additional information which must remain legible after laying may be applied by means of an inkjet process.

Table E 3 Minimum marking of the pipes

Designation	Sample marking
Name and/or trademark of the manufacturer	xyz
Quality mark for plastic pipes with a register number	P1R0000
KRV trademark (if requested)	[1]
Product standard	DIN EN 12201
Material and designation	PE 100
Dimensions ($d_n \times e_n$)	32 × 3.0
SDR series	SDR 11
Intended use	AW
Nominal pressure level	PN 16
Type of pipe, where applicable	Co-extruded layer
Manufacturer's details (by name or encrypted) Production period Production centre (if there are more than one)	 11/2012 Berlin

[1] observing licensing rights

E 8 Material/goods inward check

The material tests (TT, BRT/PVT, AT) are grouped in Table E 4.

Table E 4 Material test (per moulding compound)

Property		Require-ments for	Requirement (Parameter)	Type test (TT)	Internal monitoring (BRT/PVT)		External monitoring (AT)
				Initial type testing (ITT)	Test confirmation (according to DIN EN 10204)	Spot checks	
Classification / MRS value		PAS 1031 DIN EN 12201-1	above the reference characteristic; MRS (20°/50J) ISO9080/ISO12162: PE 80 ≥ 8 MPa; PE 100 ≥ 10 MPa	The materi-als are type-tested by the material manufac-turer.	Factory confirmation 2.1		The materials are moni-tored by the material manufacturer. - Sampling takes place at the pipe manufacturer ("funnel sample")
Density		PAS 1031 DIN EN 12201-1	≥930 kg/m³ (23°C)		Acceptance test certificate 3.1		
Colour		PAS 1031 DIN EN 12201-1	consistent, black/brown		Factory confirmation 2.1		
Dry loss: volatile matter or moisture content		PAS 1031 DIN EN 12201-1	volatile matter ≤ 350 mg/kg moisture content ≤ 300 mg/kg		Acceptance test certificate 3.1	X	
MFR melt flow index		PAS 1031 DIN EN 12201-1	0.2-1.4 g/10min ± 20 % (5 kg;190 °C)		Acceptance test certificate 3.1	X	
Thermal stability (OIT)		PAS 1031 DIN EN 12201-1	≥ 20 min (200 °C;15 ± 2 mg; O_2)		Acceptance test certificate 3.1		
Homo-geneity	Soot dispersion	PAS 1031 DIN EN 12201-1	≤ grade 3; Cl. A1, A2, A3, B		Factory certificate 2.2		
	Pigment dispersion	PAS 1031 DIN EN 12201-1	≤ grade 3; Cl. A1, A2, A3, B		Factory certificate 2.2		
Resistance to slow crack growth (SCG) [d]		PAS 1031 DIN EN 12201-1	no failure (d_n 110/125; SDR11; 80 °C; water/water; 8/9.2 bar)		Factory confirmation 2.1		
Resistance to rapid crack propagation (RCP) [d]		PAS 1031 DIN EN 12201-1	no failure (d_n 250/500;SDR11; 0 °C; air; 8/10 or 20/24 bar)		Factory confirmation 2.1		
Weather-resistance (WB), black mat.: soot content [d]		PAS 1031 DIN EN 12201-1	2 % to 2.5 %		Factory certificate 2.2		
WB coloured material (after weathering ≥ 3,5GJ/m²) [d]	Creep int.	PAS 1031 DIN EN 12201-1	> 1000 h (80 °C;4/5 MPa; water/water)		Factory confirmation 2.1		
	Elong. at break	PAS 1031 DIN EN 12201-1	≥ 350 % (100/50/25/10 mm/min)				
	Peel strength of welded joint	DIN EN 12201-1	≤ 33 % brittle fracture (d_n 110; 23 °C)				
Bending creep modulus [d]		Section 4.3.1 PAS 1031	E_{bc} (1min) ≥ 800; (24 h) ≥ 380; (2000 h) ≥ 250 N/mm²		Factory certificate 2.2		

[a] only to be conducted if the requirement for volatile matter is not met.
[d] Does not apply to material in strips

E 9 Pipe / system test

The pipe tests (TT, BRT/PVT, AT) are grouped in Table E 5.

Table E 5 Pipe tests

Property [c]		Require-ment for	Requirement (Parameter)	Type test (TT) per moulding compound				Internal monitoring (BRT/PVT)	External monitoring (AT)
				Testing to be conducted at [a, b]				Factory production control [see 7.1]	Monitoring test [see 5.2.3]
				N (ITT)	D	M	E		
Condition		12201-2, 5.1	smooth, clean, free from bub-bles/scores Ends of pipes: vertical, burr-free	1x / PG	X	X	X	1x / startup and every 8 hours	1x / half-year / PG / PS [j]
Colour		12201-2, 5.2	consistent, brown/black	1x / PG	X	X	X	1x / startup and every 8 hours	1x / half-year / PG / PS [j]
Geometric proper-ties		12201-2, 6.1-5	(after 4 h at 23 °C) out-of-roundness/ diameter/ wall thicknesses/ bound-ary dimensions/ etc.	1x / PG	-	X	X	1x / startup and every 8 hours	1x / half-year / PG / PS [j]
Creep in-ternal pressure behaviour	20 °C >100 h	12201-2, 7.2	(3 samples) >100 h (20 °C;10/12 MPa; water/water)	1x / PG31-33 (PG34,35: [i])	-	X[g]	X		
	80 °C >165 h	12201-2, 7.2	(1 sample) >165 h (80 °C;4.5/5.4 MPa; water/water)					PG31-33: 1x / batch (PG34,35 by agreement)	
	80 °C >1000 h	12201-2, 7.2	(3 samples) >1000 h (80 °C;4/5 MPa; water/water)	1x / PG31-33 (PG34,35: [i]) [h]	-	X[g]	X	PG31-33[f]: 1x /year /MC /PS /PG (PG34,35 by agreement) [h]	1x /half-year/1PG / PS [h j]
Elongation at break		12201-2, 7.2	(Number of samples in accordance with EN ISO 6259-1) ≥ 350% (100/50/25/10mm/min)	1x / PG	-	X[g]	X	1x / batch [d] (at least 1x /year /MC /PS /PG)	1x / half-year / PG / PS [j]
Thermal stability (OIT)		12201-2, 8.2	for each layer: ≥20 min (200 °C;15 ± 2 mg; oxygen)	1x / PG	-	X	-	1x / batch	1x / half-year / PG / PS [j]
Melt flow rate (MFR)		12201-2, 8.2	0.2-1.4 g/10 min ± 20 % (5 kg;190 °C)	1x / PG	-	X	X	1x / batch	1x / half-year / PG / PS [j]
Longitudinal shrink-age (only for e<16mm)		12201-2, 8.2	≤3% / original condition (110 °C; 200 mm; 60/120 min)	1x / PG	-	X	X	1x / PG / year / MC / PS	1x / half-year / PG / PS [j]
Marking		12201-2, 11.2; Tab. A1- 2	see Table E 3	1x / DN [i]	-	X	-	1x / startup and every 8 hours	1x / half-year / PG / PS [j]
Homogeneity (soot/ pigment dispersion)		PAS 1031 Annex C	(3 samples) ≤ grade 3; Cl. A1,A2,A3 or B	1x / PG	-	X	-	1x / week / extruder, as well as with any change in moulding compound and with a negative creep internal pressure test	1x / half-year / PG / PS [j]

Property [c]	Require-ment for	Requirement (Parameter)	Type test (TT) per moulding compound				Internal monitoring (BRT/PVT)	External monitoring (AT)
			Testing to be conducted at [a, b]				Factory production control [see 7.1]	Monitoring test [see 5.2.3]
			N (ITT)	D	M	E		
Bending creep modulus [k]	PAS 1031 Annex C	E_{bc} (1min) = 800 / (24 h) = 380 / (2000 h) = 250 N/mm²	1x / MC	-	X	-	1x / year / MC	1x / half-year / MC / PS [j]
Additional tests for co-extruded pipes [e]								
Structural integrity after deformation	12201-2, B0.7		1x / PG	-	X	X	1x / year / MC / PS / PG	
Layer separation	12201-2, B0.6						1x (after a creep test or elonga-tion-at-break test)	1x (after a creep test or elongation-at-break test) [j]
Additional tests for pipes with a strippable layer [e]								
Weather-resistance	12201-2, C0.3	3 x elongation at break; 3 x creep; 1 x peel strength	1x / layer rec.	X	X	-		
Resistance to rapid crack propagation (RCP)	12201-2, C0.3	(Number of samples acc. to EN ISO 134877/13478) including strippable layer: critical pressure at 250/500 mm SDR 11	1x / MC [i]	X	X	-		
Resistance to slow crack growth (SCG)	12201-2, C0.3	(3 samples) including strippable layer: dn 110 mm SDR 11	1x / MC [i]	X	X	-		

[a] N: New system [initial test, see section 5.2.1] M: Change of moulding compound [supplementary test, see section 5.2.2]
E: Extension of the product range [supplementary test, see section 5.2.2] D: Change of design [supplementary test, see section 5.2.2]
[b] Successful test validates pipes with a smaller d_n within the product group. Additional type tests have to be performed if the product range is extended.
[c] All the properties with the exception of the marking apply to the base pipe of pipes with a strippable layer which are without this layer. Condition, colour, weather-resistance and marking also apply to the pipes with a strippable layer, including this layer.
[d] Test is required when using work-in-progress materials from the same moulding compound. Test does not apply when using 100% new materials. Applies to all layers of co-extruded pipes during the MFR test. Moreover (and if not already tested in the BRT) X / year / PG / MC / PS within the scope of PVT
[e] In the case of single-layer and co-extruded pipes, RCP and SCG are covered by the use of moulding compound (MC) from the KRV list.
[f] Product group 33, only one sample necessary
[g] Sampling process for one diameter
[h] d_n<250 mm: 3 sample items; d_n ≥ 250 mm: 1 sample item; or by agreement with the monitoring centre/ indirect test in accordance with a study.
[i] by reviewing the test results of the manufacturer
[j] If there are no negative results three times in a row, the monitoring frequency is set to once a year. If there are negative results, the monitoring frequency of the PG is restored.
[k] Tests are only to be conducted on pipes with a material classification of bending creep modulus E ≤ 900 N/mm²

E 10 Number of samples

The number of samples to be taken for the monitoring test is shown in Table E 6.

Table E 6 Minimum number of samples to be taken for the monitoring test (type test may require more samples)

Product group (see section 4.1)	Mechanical/physical examinations		Hygiene examinations Number of samples and length
	Number of samples	Length L per sample	
31 (<75 mm)	9 + 3 retained samples	L = 5 × outer Ø + 250mm (500mm<L<1200mm applies)	$d_e \leq 32$ mm: 15 x 1m 32 mm < $d_e \leq 50$ mm: 6 x 1m 50 mm < d_e < 110: 4 x 1m 110 mm < d_e : 4 x 0,5m
32 (<255 mm)	6 + 3 retained samples	1200 mm	
33 (<710 mm)	6 + 3 retained samples	1200 mm	
34 (<1,800 mm)	6 + 3 retained samples	1200 mm	
35 (≥1,800 mm)	6 + 3 retained samples	1200 mm	

E 11 Consequence in the event of deviations

As a rule, products which do not meet the specified requirements are to be rejected. Further conclusions apply to individual requirements about quality assurance.

Classification (initial test):
For each failure where t<165 hours with a ductile fracture, testing on a sample from the same production batch (dimensions, extruder, production date) must be repeated with the test conditions 80°C/>165h. In the entire random sample, there may be a maximum of one failure with t<165 hours or t<1000 hours with brittle fracture. If this is the case, 10 further samples must be tested from the same production batch. No further failure of t<165 hours or t<1000 hours may occur.

Creep inner pressure behaviour:
If a creep fracture is discovered during testing prior to the minimum service life and if this is a ductile fracture (strain fracture), testing is to be conducted on three other pipe samples from the same production batch (dimensions, extruder, production date) with a reduced test tension (in accordance with DIN EN 12201-2). The minimum service life must be duly met by all three samples. If this is not passed, re-testing must be initiated.

MFR melt flow rate index:
If the measurement result of the MFR value deviates from the material inward value and from the measurement on the pipe by more than 20 %, a monitoring test must be performed immediately on the granulate from the respective reservoir of the processing machine(s). If a deviation in excess of 20 % is discovered in turn, the production volume affected is to be rejected. These pipes may no longer be used as work-in-progress materials for pressure pipes.

Longitudinal shrinkage (change after hot storage):
If the requirement is not met, testing must be repeated immediately on the pipes manufactured previously from the same extruder. If the re-test is not passed either, the production volume concerned must be rejected, and the testing frequency must be extended to once a week per extruder, as well as during any startup. If no deviations are discovered after a period of two months, the specified frequency can be restored.

Homogeneity:
If inhomogeneities > 0.02 mm², such as bubbles, cavities and foreign bodies, are discovered, testing is to be extended to a further three test items. If inhomogeneities > 0.02 mm² are discovered once again during this testing, the production volume concerned is to be rejected.

Bending creep modulus:
Where pipes do not meet requirements, testing is to be repeated on pipes of the same dimensions, material type and from the same extruder. However, if the test is unsuccessful again, the material type may only be used again once there has been renewed verification of the creep modulus, including a 2000-hour creep modulus.

Annex F ZP 14.3.1 TW - Pressure pipes made from polyethylene (PE) for drinking water – PE 80, PE 100, PE 100-RC

(Edition: 17.03.2015)

F 1 Inspection and certification principles (also refer to section 2)

DIN 8074	Polyethylene (PE) pipes - PE 80, PE 100 - Dimensions; DIN 8074:2011-12
DIN 8075	Polyethylene (PE) pipes - PE 80, PE 100 - General quality specifications; DIN 8075:2011-12
PAS 1031	Polyethylene (PE) as a material for the manufacture of pressure pipes and fittings; PAS1031:2004-09
ZP 14.23.39	Polyethylene pipes for alternative laying techniques
DIN EN 12201-1	Plastic piping systems for water supply, and for drainage and sewerage under pressure - Polyethylene (PE) - Part 1: General; German version EN 12201-1:2011-11
DIN EN 12201-2	Plastic piping systems for water supply, and for drainage and sewerage under pressure - Polyethylene (PE) - Part 2: Pipes; German version EN 12201-1:2011-11
DIN EN 12201-5	Plastic piping systems for water supply, and for drainage and sewerage under pressure - Polyethylene (PE) - Part 5: Fitness for purpose of the system; German version EN 12201-5:2011-11
FprCEN/TS 12201-7	Plastic piping systems for water supply, and for drainage and sewerage under pressure - Polyethylene (PE) - Part 7: Guidance for the assessment of conformity; German version EN 12201-7:2013-04
DIN EN 10204:2005-1	Metallic products - Types of inspection documents; German version EN 10204: 2004
KTW guidelines	Guidelines for the hygienic assessment of organic materials in contact with drinking water (KTW guidelines)

F 2 General

Annex F (ZP 14.3.1 TW) of this certification scheme applies to seamless pressure pipes made from PE 80, PE 100 or PE 100-RC for drinking water with homogeneous as well as multi-layer wall structures and, in association with sections 1 to 7, contains all the requirements for the award of the "DIN*plus*" quality mark for plastic piping systems. The quality enhancement is summarised in Table F 1.

Pressure pipes made from PE 80, PE 100 or PE 100-RC for drinking water are governed by DIN EN 12201. In accordance with the DVGW worksheet GW 335 –Part A 2 (pipes made from PE 80 and PE 100) or in accordance with DIN 8074, only pipes made from PE 80 of SDR 7.4 and SDR 11, as well as pipes made from PE 100 or PE 100-RC of SDR 11 and SDR 17 may be used. Pipes with an outer diameter of up to and including d = 63 mm in SDR 17 may not be used.

Table F 1 Quality enhancement

Requirements	**ZP 14.3.1 TW**	DIN 8074	DIN 8075	DIN EN 12201	**Refer to:**
Participation in the Plastic Pipe Association (KRV) recycling system	**+**	-	-	-	Section 1.2
Materials must be listed as pipe or strip material in the KRV material lists	**+**	-	-	-	Annex F

F 3 Product groups

The product groups (based upon DIN EN 12201-7 Table 1) are shown in Table F 2.

Table F 2 Product groups

Product group	Product type	Nominal diameter (DN/OD)
14	Pipes with a single and multi-layer wall structure with/without a strippable layer (protective layer)	d < 75 mm
15		75 mm ≤ d < 250 mm
16		250 mm ≤ d < 710 mm
17		710 mm ≤ d < 1800 mm
18		1800 mm ≤ d ≤ 2500 mm

F 4 Substance / materials used

The material used polyethylene PE 80, PE 100 or PE 100-RC must conform to DIN 8075. Furthermore, the material PE 100-RC must conform to the certification scheme CS 14.23.39 or comparable requirements.

The pipe manufacturer may only make pipes from types of materials (mixtures, layered material, strip material) which are listed or verified in the KRV material lists and for which it has passed a type test in accordance with section5.2.1 or a supplementary test in accordance with 5.2.2 of this certification scheme via DIN CERTCO for each production centre.

The composition of the granulate mixture for the approved pipe is to be submitted to DIN CERTCO for filing. All the additives used must be distributed evenly. None of the additives may adversely affect the manufacture or weldability of the pipeline parts either on their own or with other additives, nor may they compromise the chemical, physical or mechanical properties specified in this standard.

Only granulate mixtures of the same MRS class or only RC materials (i.e. same material designation) may be mixed. The pipe manufacturer must confirm that it does not object to this.

Substance types, which have been approved for the respective production centre, with the same material designation and same MRS class may be combined in the co-extrusion process.

In the case of multi-layer pipes in which all the layers are made from PE, the outer layer is a signal layer provided it does not exceed 10% of the nominal wall thickness. Pipes with a signal layer must be type-tested. The suitability of material types which have not been used so far for the base pipe is determined through type testing. The suitability of material types which have not been used so far for the signal layer is determined by a monitoring test conducted as part of external monitoring.

New material is to be used for the manufacture of single-layer pipes. The use of work-in-progress material from the same PE moulding compound is permissible. The PE moulding compound for the pipe manufacture must conform to DIN EN 12201-1. Reclaimed material, regenerated material and recycled material may not be used.

New material is to be used for the manufacture of multi-layer pipes. Work-in-progress material from co-extruded pipes may not be used for co-extruded pipes that are intended for the delivery of drinking water. Reclaimed material, regenerated material and recycled material may not be used.

F 5 Delivery form

The pipes are supplied in straight lengths, as coiled bundles and drum goods ($D_{in} > 18d_n$ in conformity with DIN EN 12201-2).

F 6 Processing and laying guidelines

The pipe manufacturer is required to issue supplementary information about laying in the case of laying measures which go over and beyond the specifications of the DIN standards, DVGW worksheets and KRV laying instructions.

F 7 Minimum marking

All the pipes are to be marked continuously and permanently (embossing/laser) - at intervals of about 1 m - with the minimum information indicated in Table F 3.

Additional information which must remain legible after laying may be applied by means of an inkjet process.

Table F 3 Minimum marking of the pipes

Designation	Sample marking
Name and/or trademark of the manufacturer	xyz
Quality mark for plastic pipes with a register number	…. P1R0000
KRV trademark	[1]
Product standard	DIN EN 12201
Material and designation	PE 100
Dimensions ($d_n \times e_n$)	32 × 3,0
SDR series	SDR 11
Intended use [2]	TW
Nominal pressure level	PN 16
Type of pipe, where applicable	Co-extruded layer
Manufacturer's details (by name or encrypted) Production period Production centre (if there are more than one)	 11/2012 Berlin

[1] observing licensing rights

F 8 Material/goods inward check

The material tests (TT, BRT/PVT, AT) are grouped in Table F 4.

Table F 4 Material test (per moulding compound)

Property		Require-ments for	Requirement (Parameter)	Type test (TT)	Internal monitoring (BRT/PVT)		External monitoring (AT)
				Initial type testing (ITT)	Test confirmation (according to DIN EN 10204)	Spot checks	
Classification / MRS value		PAS 1031 DIN EN 12201-1	above the reference characteristic; MRS (20°/50 J) ISO9080/ISO12162: PE 80 ≥ 8 MPa; PE 100 ≥ 10 MPa	The materi-als are type-tested by the material manufac-turer.	Factory confirmation 2.1		The materials undergo monitoring tests by the material manufacturer. - Sampling can take place at the pipe manufacturer ("funnel sample")
Density		PAS 1031 DIN EN 12201-1	≥930 kg/m³ (23 °C)		Acceptance test certificate 3.1		
Colour		PAS 1031	consistent, blue/black		Factory confirmation 2.1		
Dry loss: volatile matter or moisture content		PAS 1031 DIN EN 12201-1	volatile matter ≤ 350 mg/kg moisture content ≤ 300 mg/kg		Acceptance test certificate 3.1	X	
MFR melt flow index		PAS 1031 DIN EN 12201-1	0.2-1.4 g/10 min ± 20 % (5 kg;190 °C)		Acceptance test certificate 3.1	X	
Thermal stability (OIT)		PAS 1031 DIN EN 12201-1	≥20 min (200 °C;15 ± 2 mg; O2)		Acceptance test certificate 3.1		
Homogeneity (soot dispersion)		PAS 1031 DIN EN 12201-1	≤ grade 3; Cl. A1, A2, A3, B		Factory certificate 2.2		
Homogeneity (pigment disp.)		PAS 1031 DIN EN 12201-1	≤ grade 3; Cl. A1, A2, A3, B		Factory certificate 2.2		
Slow crack growth (SCG) [d]		PAS 1031 DIN EN 12201-1	no failure (d_n 110/125; SDR11; 80°C; 165h; water/water; 8/9.2 bar)		Factory confirmation 2.1		
Rapid crack propagat. (RCP) [d]		PAS 1031 DIN EN 12201-1	no failure (d_n 250/500;SDR11; 0 °C; air; 8/10 or 20/24 bar)		Factory confirmation 2.1		
Weather-resistance (WB), black mat.: soot content [d]		PAS 1031 DIN EN 12201-1	2-2.5 % by weight		Factory certificate 2.2		
Weather-re-sistant col-oured mate-rial (after weathering ≥ 3.5 GJ/m²) [d]	Creep int.	PAS 1031 DIN EN 12201-1	> 1000h (80 °C;4/5 MPa; water/water)		Factory confirmation 2.1		
	Elongation at break	PAS 1031 DIN EN 12201-1	≥ 350 % (100/50/25/10 mm/min)				
	Peel strength of heating coil welded joint	DIN EN 12201-1	≤ 33 % brittle fracture (d_n 110; 23 °C)				
Influence on the quality of wa-ter		KTW guidelines DVGW W 270	Positive list/ Odour and taste test / Mi-crobiological test		Factory confirmation 2.1/ Ac-ceptance test certificate 3.1		

[a] only to be verified if the requirement for volatile matter is not met
[d] Does not apply to material in strips

F 9 Pipe / system tests

The pipe tests (TT, BRT/PVT, AT) are grouped in Table F 5.

Table F 5 Pipe tests

Property [c]		Require-ment for	Requirement (Parameter)	Type test (TT) per moulding compound				Internal monitoring (BRT/PVT)	External monitoring (AT)
				Testing to be conducted at [a, b]				Factory production control [see 7.1]	Monitoring test [see 5.2.3]
				N (ITT)	D	M	E		
Condition		12201-2, 5.1	smooth, clean, free from bub-bles/scores Ends of pipes: vertical, burr-free	1x / PG	X	X	X	1x / startup and every 8 hours	1x / half-year /PG /PS [j]
Colour		12201-2, 5.2	consistent; blue / black+blue str.	1x / PG	X	X	X	1x / startup and every 8 hours	1x / half-year /PG /PS [j]
Influence on the quality of water		12201-2, 5.3 KTW guidelines PAS 1031	Positive list; odour and taste test	1x / PG	-	X	-		1x / year
Geometric proper-ties		12201-2, 6.1-5		1x / PG	-	X	X	1x / startup and every 8 hours	1x / half-year /PG /PS [j]
Creep in-ternal pressure behaviour	20 °C >100 h	12201-2, 7.2	(3 samples) >100 h (20 °C;10/ 12 MPa; water/water)	1x / PG14-16 (PG17,18: [i])	-	X[g]	X		
	80 °C >165 h	12201-2, 7.2	(1 sample) >165 h (80 °C;4.5/ 5.4 MPa; water/water)					PG14-16: 1x / batch (PG17,18 by agreement)	
	80 °C >1000h	12201-2, 7.2	(3 samples) >1000 h (80 °C;4/5 MPa; water/water)	1x / PG14-16 (PG18,18: [i]) [h]	-	X[g]	X	PG14-16[f]: 1x /year /MC /PS /PG (PG17,18 by agreement) [h]	1x / half-year / on 1 PG / PS[h j]
Elongation at break		12201-2, 7.2	(Number of samples in accordance with EN ISO 6259-1) ≥ 350 % (100/50/25/10 mm/min)	1x / PG	-	X[g]	X	1x / batch [d] (at least 1x /year /MC /PS /PG)	1x / half-year /PG /PS [j]
Thermal stability (OIT)		12201-2, 8.2	for each layer: ≥20 min (200 °C;15 ± 2 mg; oxygen)	1x / PG	-	X	-	1x / batch	1x / half-year /PG /PS [j]
Melt flow rate (MFR)		12201-2, 8.2	0.2-1.4 g/10min ± 20 % (5 kg;190 °C)	1x / PG	-	X	X	1x / batch [d]	1x / half-year /PG /PS [j]
Longitudinal shrink-age (only for e≤16mm)		12201-2, 8.2	≤3 % / original condition (110 °C; 200 mm; 60/120 min)	1x / PG	-	X	X	1x / PG / year / MC / PS	1x / half-year /PG /PS [j]
Marking		12201-2, 11.2; Tab. A1- 2	see Table F 3	1x / DN [i]	-	X	-	1x / startup and every 8 hours	1x / half-year /PG /PS [j]
Homogeneity (soot/ pigment dispersion)		PAS 1031	(3 samples) ≤ grade 3; Cl. A1, A2, A3 or B	1x / PG		X		1x / week / extruder, as well as with any change in moulding compound and with a negative creep internal pressure test	1x / half-year /PG /PS [j]

Property [c]	Require-ment for	Requirement (Parameter)	Type test (TT) per moulding compound				Internal monitoring (BRT/PVT)	External monitoring (AT)
			Testing to be conducted at [a, b]				Factory production control [see 7.1]	Monitoring test [see 5.2.3]
			N (ITT)	D	M	E		
Additional tests for co-extruded pipes [e]								
Structural integrity after deformation	12201-2, B0.7		1x / PG	-	X	X	1x / year / MC / PS / PG	
Layer separation	12201-2, B0.6						X (after a creep test or elongation-at-break test)	X (after a creep test or elongation-at-break test) [j]
Additional tests for pipes with a strippable layer [e]								
Weather-resistance	12201-2, C0.3	3 x elongation at break; 3 x creep; 1 x peel strength	1x / layer rec.	X	X	-		
Resistance to rapid crack propagation (RCP)	12201-2, C0.3	(Number of samples acc. to EN ISO 134877/13478) including strippable layer: critical pressure at 250/500 mm SDR 11	1x / MC [i]	X	X	-		
Resistance to slow crack growth (SCG)	12201-2, C0.3	(3 samples) including strippable layer: dn 110 mm SDR 11	1x / MC [i]	X	X	-		

[a] N: New system [initial test, see section 5.2.1] M: Change of moulding compound [supplementary test, see section 5.2.2]
E: Extension of the product range [supplementary test, see section 5.2.2] D: Change of design [supplementary test, see section 5.2.2]
[b] Successful test validates pipes with a smaller d_n within the product group. Additional type tests have to be performed if the product range is extended.
[c] All the properties with the exception of the marking apply to the base pipe of pipes with a strippable layer which are without this layer. Condition, colour, weather-resistance and marking also apply to the pipes with a strippable layer, including this layer.
[d] Test is required when using work-in-progress materials from the same moulding compound. Test does not apply when using 100% new materials. Applies to all layers of co-extruded pipes during the MFR test. Moreover (and if not already tested in the BRT) X / year / PG / MC / PS within the scope of PVT
[e] In the case of single-layer and co-extruded pipes, RCP and SCG are covered by the use of moulding compound (MC) from the KRV list.
[f] Product group 33, only one sample necessary
[g] Sampling process for one diameter
[h] d_n<250 mm: 3 sample items; $d_n \geq 250$ mm: 1 sample item; or by agreement with the monitoring centre/ indirect test in accordance with a study.
[i] by reviewing the test results of the manufacturer

[j] If there are no negative results three times in a row, the monitoring frequency is set to once a year. If there are negative results, the monitoring frequency of the PG is restored.

F 10 Number of samples

The number of samples to be taken for the monitoring test is shown in Table F 6.

Table F 6 Minimum number of samples to be taken for the monitoring test (type test may require more samples)

Product group (see section 4.1)	Mechanical/physical examinations		Hygiene examinations Number of samples and length
	Number of samples	Length L per sample	
14 (<75 mm)	6 + 3 retained samples	L = 5 × outer Ø + 250 mm (500 mm < L < 1200 mm applies)	$d_e \leq 32$ mm: 15 x 1 m
15 (<250 mm)	6 + 3 retained samples	1200 mm	32 mm < $d_e \leq 50$ mm: 6 x 1 m
16 (<710 mm)	6 + 3 retained samples	1200 mm	50 mm < $d_e \leq 110$: 4 x 1m
17 (<1,800 mm)	6 + 3 retained samples	1200 mm	
18 (≥1,800 mm)	6 + 3 retained samples	1200 mm	110 mm < d_e : 4 x 0,5m

F 11 Consequences in the event of deviations

As a rule, products which do not meet the specified requirements are to be rejected. Further conclusions apply to individual requirements about quality assurance.

Classification (initial test):
For each failure where t<165 hours with a ductile fracture, testing on a sample from the same production batch (dimensions, extruder, production date) must be repeated with the test conditions 80°C/>165h. In the entire random sample, there may be a maximum of one failure with t < 165 hours or t < 1000 hours with brittle fracture. If this is the case, 10 further samples must be tested from the same production batch. No further failure of t < 165 hours or t < 1000 hours may occur.

Creep inner pressure behaviour:
If a creep fracture is discovered during testing prior to the minimum service life and if this is a ductile fracture (strain fracture), testing is to be conducted on three other pipe samples from the same production batch (dimensions, extruder, production date) with a reduced test tension (in accordance with DIN EN 12201-2). The minimum service life must be duly met by all three samples. If this is not passed, re-testing must be initiated.

MFR melt flow rate index:
If the measurement result of the MFR value deviates from the material inward value and from the measurement on the pipe by more than 20 %, a monitoring test must be performed immediately on the granulate from the respective reservoir of the processing machine(s). If a deviation in excess of 20 % is discovered in turn, the production volume affected is to be rejected. These pipes may no longer be used as work-in-progress materials for pressure pipes.

Longitudinal shrinkage (change after hot storage):

If the requirement is not met, testing must be repeated immediately on the pipes manufactured previously from the same extruder. If the re-test is not passed either, the production volume concerned must be rejected, and the testing frequency must be extended to once a week per extruder, as well as during any startup. If no deviations are discovered after a period of two months, the specified frequency can be restored.

Homogeneity:
If inhomogeneities > 0.02 mm², such as bubbles, cavities and foreign bodies, are discovered, testing is to be extended to a further three test items. If inhomogeneities > 0.02 mm² are discovered once again during this testing, the production volume concerned is to be rejected.

Annex G ZP 14.3.1 G - Pressure pipes made from polyethylene (PE) for gas – PE 80, PE 100, PE 100-RC

(Edition: 17.03.2015)

G 1 Inspection and certification principles (also refer to section 2)

DIN 8074	Polyethylene (PE) pipes - PE 80, PE 100 - Dimensions; DIN 8074:2011-12
DIN 8075	Polyethylene (PE) pipes - PE 80, PE 100 - General quality specifications; DIN 8075:2011-12
PAS 1031	Polyethylene (PE) as a material for the manufacture of pressure pipes and fittings; PAS1031:2004-09
ZP 14.23.39	Polyethylene pipes for alternative laying techniques
DIN EN 1555-1	Plastic piping systems for the supply of gaseous fuels - Polyethylene (PE) - Part 1: General; German version EN 1555-1:2010-12
DIN EN 1555-2	Plastic piping systems for the supply of gaseous fuels - Polyethylene (PE) - Part 2: Pipes; German version EN 1555-1:2010-12
DIN EN 1555-5	Plastic piping systems for the supply of gaseous fuels - Polyethylene (PE) - Part 5: Fitness for purpose of the system; German version EN 1555-1:2010-12
DIN CEN/TS 1555-7	Plastic piping systems for the supply of gaseous fuels - Polyethylene (PE) - Part 7: Guidance for the assessment of conformity; German version EN 1555-1:2013-04 (DIN SPEC 16454)
DIN EN 10204:2005-1	Metallic products - Types of inspection documents; German version EN 10204:2004

G 2 General

Annex G (ZP 14.3.1 G) of this certification scheme applies to seamless pressure pipes made from PE 80, PE 100 or PE 100-RC for gas with homogeneous as well as multi-layer wall structures and, in association with sections 1 to 7, contains all the requirements for the award of the "DIN*plus*" quality mark for plastic piping systems. The quality enhancement is summarised in Table G 1.

Pressure pipes made from PE 80, PE 100 or PE 100-RC for gas are governed by DIN EN 1555. In accordance with the DVGW worksheet GW 335 – Part A 2 (pipes made from PE 80 and PE 100) or in accordance with DIN 8074, only pipes made from PE 80 of SDR 11 (5 bar) and SDR 17.6 (2 bar),

as well as pipes made from PE 100 of SDR 11 (10 bar) and SDR 17 (5 bar) may be used. Pipes with an outer diameter of up to and including d = 63 mm in SDR 17 or 17.6 may not be used. DVGW worksheet G 260 must be complied with in the transport of flammable, compressed gases.

Table G 1 Quality enhancement

Requirements	ZP 14.3.1 G	DIN 8074	DIN 8075	DIN EN 1555	Refer to:
Participation in the Plastic Pipe Association (KRV) recycling system	+	-	-	-	Section 1.2
Materials must be listed as pipe or strip material in the KRV material lists	+	-	-	-	Annex G

G 3 Product groups

The product groups (based upon DIN EN 1555-7 Table 1) are shown in Table G 2.

Table G 2 Product groups

Product group	Product type	Nominal diameter (DN/OD)
43	Pipes with a single and multi-layer wall structure with/without a strippable/peelable layer (protective layer)	d < 75 mm
44		75 mm ≤ d < 250 mm
45		250 mm ≤ d ≤ 630 mm

G 4 Substance / materials used

The material used polyethylene PE 80, PE 100 or PE 100-RC must conform to DIN 8075. Furthermore, the material PE 100-RC must conform to the certification scheme ZP 14.23.39 or comparable requirements.

The pipe manufacturer may only make pipes from types of materials (mixtures, layered material, strip material) which are listed or verified in the KRV material lists and for which it has passed a type test in accordance with section 5.2.1 or a supplementary test in accordance with 5.2.2 of this certification scheme via DIN CERTCO for each production centre.

The composition of the granulate mixture for the approved pipe is to be submitted to DIN CERTCO for filing. All the additives used must be distributed evenly. None of the additives may adversely affect the manufacture or weldability of the pipeline parts either on their own or with other additives, nor may they compromise the chemical, physical or mechanical properties specified in this standard.

Only granulate mixtures of the same MRS class or only RC materials (i.e. same material designation) may be mixed. The pipe manufacturer must confirm that it does not object to this.

Substance types, which have been approved for the respective production centre, with the same material designation and same MRS class may be combined in the co-extrusion process.

In the case of multi-layer pipes in which all the layers are made from PE, the outer layer is a signal layer provided it does not exceed 10% of the nominal wall thickness. Pipes with a signal layer must be type-tested. The suitability of material types which have not been used so far for the base pipe is determined through type testing. The suitability of material types which have not been used so far for the signal layer is determined by a monitoring test conducted as part of external monitoring.

New material is to be used for the manufacture of the pipes. An identical type of work-in-progress material from the pipe manufacturer's pressure pipe production process may not be used. Reclaimed material, regenerated material and recycled material may not be used.

G 5 Delivery form

The pipes are supplied in straight lengths, as coiled bundles and drum goods ($D_{in} > 18d_n$ in conformity with DIN EN 12201-2).

G 6 Processing and laying guidelines

The pipe manufacturer is required to issue supplementary information about laying in the case of laying measures which go over and beyond the specifications of the DIN standards, DVGW worksheets and KRV laying instructions.

G 7 Minimum marking

All the pipes are to be marked continuously and permanently (embossing/laser) - at intervals of about 1 m - with the minimum information indicated in Table G 3.

Table G 3 Minimum marking of the pipes

Designation	Sample marking
Name and/or trademark of the manufacturer	xyz
Quality mark for plastic pipes with a register number	P1R0000
KRV trademark	[1]
Product standard	DIN EN 1555
Material and designation	PE 100
Dimensions ($d_n \times e_n$) (in gas pipes with a d_n > 32mm: only d_n is adequate)	32 × 3.0
SDR series (not necessary for gas pipes with a $d_n \leq 32$mm)	SDR 11
Intended use	G
Type of pipe, where applicable	Co-extruded layer
Manufacturer's details (by name or encrypted) Production period Production centre (if there are more than one)	 11/2012 Berlin

[1] observing licensing rights

G 8 Material/goods inward check:

The material tests (TT, BRT/PVT, AT) are grouped in Table G 4.

Table G 4 Material test (per moulding compound)

Property		Require-ments for	Requirement (Parameter)	Type test (TT)	Factory production control FPC (PVT)		Monitoring test (AT)
				Initial type testing (ITT)	Test confirmation (according to DIN EN 10204)	Spot checks	
Classification / MRS value (Verification of long-term strength)		PAS 1031 DIN EN 12201-1	above the reference characteristic; MRS (20°/50 J) ISO9080/ ISO 12162: PE 80 ≥ 8 MPa; PE 100 ≥ 10 MPa	The materi-als are type-tested by the material manufac-turer.	Factory confirmation 2.1		The materials undergo monitoring tests by the material manufacturer. - Sampling can take place at the pipe manufacturer ("funnel sample")
Density		PAS 1031 DIN EN 1555-1	≥930 kg/m³ (23 °C)		Acceptance test certificate 3.1		
Colour		DIN EN 1555-1	PE 80: black/yellow PE 100: black/orange-yellow		Factory confirmation 2.1		
Dry loss: volatile matter or moisture content [a]		PAS 1031 DIN EN 1555-1	≤ 350 mg/kg ≤ 300 mg/kg		Acceptance test certificate 3.1	X	
MFR melt flow index		PAS 1031 DIN EN 1555-1	0.2-1.4 g/10min ± 20 % (5 kg;190 °C)		Acceptance test certificate 3.1	X	
Thermal stability (OIT)		PAS 1031 DIN EN 1555-1	≥ 20 min (200 °C;15 ± 2 mg; O_2)		Acceptance test certificate 3.1		
Homogeneity (soot dispersion)		PAS 1031 DIN EN 1555-1	≤ grade 3; Cl. A1,A2,A3,B		Factory certificate 2.2		
Homogeneity (pigment disper-sion)		PAS 1031 DIN EN 1555-1	≤ grade 3; Cl. A1,A2,A3,B		Factory certificate 2.2		
Resistance to slow crack growth (SCG) [d]		PAS 1031 DIN EN 1555-1	no failure (d_n 110/125; SDR11; 80 °C; water/water; 8/9.2 bar)		Factory confirmation 2.1		
Resistance to rapid crack propagation (RCP) [d]		PAS 1031 DIN EN 1555-1	no failure (d_n 250/500;SDR11; 0 °C; air; 8/10 or 20/24 bar)		Factory confirmation 2.1		
Weather-resistance (WB), black mat.: soot content [d]		PAS 1031 DIN EN 1555-1	2 % to 2.5 %		Factory certificate 2.2		
Weather-re-sistant col-oured mate-rial (after weathering ≥ 3,5GJ/m²) [d]	Creep int.	PAS 1031 DIN EN 1555-1	>1000 h (80 °C;4/5 MPa; water/water)		Factory confirmation 2.1		
	Elongation at break	PAS 1031 DIN EN 1555-1	≥ 350 % (100/50/25/10 mm/min)				
	Peel strength of heating coil welded joint	PAS 1031 DIN EN 1555-1	≤ 33 % brittle fracture (d_n 110; 23 °C)				
Gas-resistance		DIN EN 1555-1	>20 h (80 °C; 2 MPa; d_n=32 / e_n=3 mm; gas/water; conditioned)				

[a] only to be conducted if the requirement for volatile matter is not met.
[d] Does not apply to material in strips

G 9 Pipe / system tests

The pipe tests (TT, BRT/PVT, AT) are grouped in Table G 5.

Table G 5 Pipe tests

Property [c]		Requirement for	Requirement (Parameter)	Type test (TT) per moulding compound				Internal monitoring (BRT/PVT)	External monitoring (AT)
				Testing to be conducted at [a, b]				Factory production control [see 7.1]	Monitoring test [see 5.2.3]
				N (ITT)	D	M	E		
Condition		1555-2, 5.1	smooth, clean, free from bubbles/scores Ends of pipes: vertical, burr-free	1x / PG	X	X	X	1x / startup and every 8 hours	1x / half-year / PG / PS [j]
Colour		1555-2, 5.2	PE 80: black+yellow stripes; yellow PE 100: black+orange-yellow stripes; orange-yellow	1x / PG	X	X	X	1x / startup and every 8 hours	1x / half-year / PG / PS [j]
Geometric properties		1555-2, 6	(after 4 h at 23 °C) out-of-roundness/ diameter/ wall thicknesses/ boundary dimensions/ etc.	1x / PG	-	X	X	1x / startup and every 8 hours	1x / half-year / PG / PS [j]
Change in diameter		1555-2, 6.4	d_{em} within tolerance (23 °C; 24-48 h after prod.; after cond. in water at 80 °C);	1x / PG45	-	X	X	1x / year / MC / PG45 / PS	1x / half-year/ PG 45 / PS [j]
Creep internal pressure behaviour	20°C >100 h	1555-2, 7.2	(3 samples) >100 h (20 °C;10/12 MPa; water/water)	1x / PG	-	X[g]	X		
	80°C >165h	1555-2, 7.2	(1 sample) >165 h (80 °C;4.5/5.4 MPa; water/water)					PG43-44: 1x / batch / week PG45: 1x / batch	
	80°C >1000h	1555-2, 7.2	(3 samples/ PG45: 1 sample) >1000 h (80 °C;4/5 MPa; water/water)	1x / PG	-	X[g]	X	1x / year / MC / PS / PG [h]	1x /half-year/ PG / PS [h j]
Elongation at break		1555-2, 7.2	(Number of samples in accordance with EN ISO 6259-1) ≥ 350 % (100/50/25/10 mm/min)	1x / PG	-	X[g]	X	PG43-44: 1x / batch / week [d] PG45: 1x / batch [d] (at least 1x / year / MC / PS / PG) [d]	1x / half-year / PG / PS [j]
Resistance to slow crack growth (notch test)		1555-2, 7.2	(3 samples) including strippable layer: d_n 110 mm SDR 11	1x / PG	-	X	X		1x /half-year/ PG / PS [h j]
Resistance to rapid crack propagation (critical pressure) [e,f]		1555-2, 7.2	(Number of samples acc. to EN ISO 134877/13478) including strippable layer: critical pressure at 250/500 mm SDR 11	1x / PG	-	X	X		1x / 2 years / PS
Thermal stability (OIT)		1555-2, 8.2	for each layer: ≥20min (200°C; 15±2mg; oxygen)	1x / PG	-	X	-	PG43-44: 1x / batch / week PG45: 1x / batch	1x / half-year / PG / PS [j]
Melt flow rate (MFR)		1555-2, 8.2	0.2-1.4 g/10min ± 20 % (5 kg;190 °C)	1x / PG	-	X	x	PG43-44: 1x / batch / week [d] PG45: 1x / batch [d]	1x / half-year / PG / PS [j]

Property [c]	Require-ment for	Requirement (Parameter)	Type test (TT) per moulding compound				Internal monitoring (BRT/PVT)	External monitoring (AT)
			Testing to be conducted at [a, b]				Factory production control [see 7.1]	Monitoring test [see 5.2.3]
			N (ITT)	D	M	E		
Longitudinal shrink-age (only for e≤16mm)	1555-2, 8.2	≤3 % / original condition (110 °C; 200 mm; 60/120 min)	1x / PG	-	X	X	1x / year / MC / PS / PG	1x / half-year /PG/PS [j]
Marking	1555-2, 10.2; B-14.3.1 G- 2	see Table G 3	1x / PG [i]	-	X	-	1x / startup and every 8 hours	1x / half-year /PG /PS [j]
Homogeneity (soot/ pigment dispersion)	PAS1031	(3 samples) ≤ grade 3; Cl. A1,A2,A3 or B	1x / PG		X		1x / week / extruder, as well as with any change in moulding com-pound and with a negative creep internal pressure test	1x / half-year/ PG /PS [j]
Tensile strength with butt welding	1555-5, 4.2.2.1-2		1x / PG 44 [i]	-	X	-		
Squeezing	1555-2; Annex C		1x / DN63 [i]	-	X	-		
Additional tests for co-extruded pipes [e]								
Structural integrity after deformation	1555-2, A.7		1x / PG	-	X	X	1x / year / MC / PS / PG	
Layer separation	1555-2, A.6						X (after a creep test or elongation-at-break test)	X (all tests) [j]
Additional tests for pipes with a strippable/peelable layer [e]								
Weather-resistance	1555-2, B.3	3x elongation at break; 3x creep; 1x peel strength	1x / DN / layer rec.	X	X	-		

[a] N: New system [initial test, see section 5.2.1] M: Change of moulding compound [supplementary test, see section 5.2.2]
E: Extension of the product range [supplementary test, see section 5.2.2] D: Change of design [supplementary test, see section 5.2.2]

[b] Successful test validates pipes with a smaller/identical d_n and higher SDR (i.e. lower wall thickness). Additional type tests have to be performed if the product range is extended.

[c] All the properties with the exception of the marking apply to the base pipe of pipes with a strippable layer which are without this layer. Condition, colour, weather-resistance and marking also apply to the pipes with a strippable layer, including this layer.

[d] Test is required when using work-in-progress materials from the same moulding compound. Test does not apply when using 100% new materials. Applies to all layers of co-extruded pipes during the MFR test. Moreover (and if not already tested in the BRT) X / year / PG / MC / PS within the scope of PVT

[e] In the case of single-layer and co-extruded pipes, RCP and SCG are covered by the use of moulding compound (MC) from the KRV list.

[f] Product group 45, only one sample necessary

[g] Sampling process for one diameter

[h] d_n<250mm: 3 sample items; d_n ≥ 250mm: 1 sample item

[i] by reviewing the test results of the manufacturer

[j] If there are no negative results three times in a row, the monitoring frequency is set to once a year. If there are negative results, the monitoring frequency of the PG is restored.

G 10 Number of samples

The number of samples to be taken for the monitoring test is shown in Table G 6.

Table G 6 Minimum number of samples to be taken for the monitoring test (type test may require more samples)

Product group (see section 4.1)	Mechanical/physical examinations		
	Number of samples	Length L per sample	
43 (<75 mm)	6 + 3 retained samples	L = 5 × outer Ø + 250 mm (500 mm<L<1200 mm applies)	
44 (<250 mm)	6 + 3 retained samples	1200 mm	
45 (≥250 mm)	6 + 3 retained samples	1200 mm	

G 11 Consequence in the event of deviations

As a rule, products which do not meet the specified requirements are to be rejected. Further conclusions apply to individual requirements about quality assurance.

Classification (initial test):
For each failure where t<165 hours with a ductile fracture, testing on a sample from the same production batch (dimensions, extruder, production date) must be repeated with the test conditions 80°C/>165h.
In the entire random sample, there may be a maximum of one failure with t<165 hours or t<1000 hours with brittle fracture. If this is the case, 10 further samples must be tested from the same production batch. No further failure of t<165 hours or t<1000 hours may occur.

Creep inner pressure behaviour:
If a creep fracture is discovered during testing prior to the minimum service life and if this is a ductile fracture (strain fracture), testing is to be conducted on three other pipe samples from the same production batch (dimensions, extruder, production date) with a reduced test tension (in accordance with DIN EN 1555-2). The minimum service life must be duly met by all three samples.

MFR melt flow rate index:
If the measurement result of the MFR value deviates from the material inward value and from the measurement on the pipe by more than 20 %, a monitoring test must be performed immediately on the granulate from the respective reservoir of the processing machine(s). If a deviation in excess of

20 % is discovered in turn, the production volume affected is to be rejected. These pipes may no longer be used as work-in-progress materials for pressure pipes.

Longitudinal shrinkage (change after hot storage):
If the requirement is not met, testing must be repeated immediately on the pipes manufactured previously from the same extruder. If the re-test is not passed either, the production volume concerned must be rejected, and the testing frequency must be extended to once a week per extruder, as well as during any startup. If no deviations are discovered after a period of two months, the specified frequency can be restored.

Homogeneity:
If inhomogeneities > 0.02 mm², such as bubbles, cavities and foreign bodies, are discovered, testing is to be extended to a further three test items. If inhomogeneities > 0.02 mm² are discovered once again during this testing, the production volume concerned is to be rejected.

Annex H ZP 9.12.1 - Multilayer composite plastic piping made from PP-RCT with PP-RCT- intermediate fiber glass layer

(Edition: 17.03.2015)

H 1 Inspection and certification principles (also also refer to section 2)

DIN 8077	Polypropylene (PP) pipes – PP-H, PP-B, PP-R, PP-RCT – Dimensions; DIN 8077:2008-09
DIN 8078	Polypropylene (PP) pipes - PP-H, PP-B, PP-R, PP-RCT – General quality requirements and testing; DIN 8078:2008-09
DIN EN ISO 15874-2:	Plastics piping systems for hot and cold water installations - Polypropylene (PP) - Part 2: Pipes (ISO 15874-2:2013); German and English version EN ISO 15874-2:2013-06
DIN EN 10204:2005-1	Metallic products - Types of inspection documents; German version EN 10204:2004

H 2 General

Annex H (ZP 9.12.1) of this certification scheme applies to seamless multi-layer composite plastic piping made from PP-RCT with PP-RCT-intermediate fiber glass layer which are provided with the quality sign „DIN*plus“* from DIN CERTCO. The quality enhancement is summarised in Table H 1.

The pipes in accordance with this certifacation pragramme are pressure pipe for industry and installation based on DIN 8077/8078. Deviating from DIN 8077/8078 the present multilayer pipe is regarded as a solid-wall pipe und is also used as verification impact strength.

If the pipes conform to the „Guideline on the hygienic assessment of organic materials in contact with drinking water (KTW-guidlines)“ and are marked with the application disignation TW (i. e. drinking water suitable) , they may also be used in drinking water application.

Table H 1 Quality enhancement

Requirements	Annex H ZP 9.12.1	DIN 8077	DIN 8078	DIN EN ISO 21003	Refer to:
Participation in the Plastic Pipe Association (KRV) recycling system	+	-	-	-	Section 1.2
MFR PP-RCT 230/2.16 ≤ 0,5 g/10 min	+	-	-	-	Annex H
MFR deviation granule/pipe ≤20 % at 230 °C/ 2,16 kg	+	-	-	-	Annex H
Longitudinal heat reversion: longitudinal shrinkage ≤ 1,5 %	+	-	≤ 2 %	-	Annex H
Length change factor ≤ 0,1 mm/m K	+	-	-	-	Annex H

H 3 Product groups

The product groups are shown in Table H 2. Certificates are issued per product group and product type if all requirements are met.

Table H 2 Product groups

Product groups	Product type	Nominal diameter (DN/OD)
151	Pipes	d < 75 mm
152		75 mm ≤ d < 250 mm
153		250 mm ≤ d ≤ 630 mm

H 4 Substance / materials used

The composite plastic pipes made from PP-RCT, with a PP-RCT-intermediate fibre glass layer, consist of three concentric layers. The layer in the middle is filled with ≥ 12 % fibre glass (weight percent). The pipes manufucturing effects with the Coextrusion process. The intermediate layer reduces the thermic Lengh variation of the complete pipe.
The inner layer (layer in contact with fluid being conducted) and the other layer (layer in contact with outer einvirement) consist of PP-RCT conforming to DIN 8077/78.

The long-term stability of the PP-RCT materials used (excluding fibre glass content) (internal pressure creep behaviour) must be verified in accordance with the processes defined in DIN EN ISO 9080 or DIN 16887. The internal pressure creep behaviour determined in this way may not exceed the reference characteristics (minimum curves) specified in DIN 8078 at any point.

Verification of the long-term stability of the pipe must be provided:

1. for temperatures of 20 °C, 60 °C, 95 °C and 110 °C,
2. for creep failure values of between 10 and 100, 100 and 1,000, 1,000 and 10,000, over 10,000 hours,
3. On four outside diameters with SDR 7.4 and SDR 11.

The pipe manufacturer must ensure that the documents are submitted to DIN CERTCO by the respective raw material producer for each type of material. This also applies to the type of fibre glass used in the intermediate layer. The fibre type, fibre length, fibre diameter and fibre percentage (% by weight) are to be indicated here.
New material must be used for the manufacture of the pipes. The use of recycled material of the same type as that used in the pipe manufacturer's pressure pipe production, as well as of return material type A is permissible (100% permitted).

Reclaimed and recycled material may not be used.

H 5 Production

The process for the manufacture of pipes and fittings must ensure even and reproducible production conditions, as well as be documented in accordance with the factory regulations of the pipeline part manufacturer.

The correlation between the test batch and the date of manufacture must be established by factory records. The types of materials used must be entered in these records.

The extruder settings must be monitored; a record is to be kept of important parameters.

H 6 Dimensions

DIN 8077 governs the outside diameters and total wall thicknesses of the pipes.

(Current versions of) the relevant factory standards will apply with regard to the wall thicknesses of the outer, intermediate and inner layer of the pipes. It must be approved by DIN CERTCO and be saved there. Individual areas were the total pipe wall thickness s is exceeded may be as follows: where s ≤ 10 mm, + 0.2 s and where s > 10 mm, + 0.15 s.

The thickness of the individual layers of the cross-section of the pipe is determined using a measuring microscope. Other appropriate processes are permissible. The outside diameter is determined using a circometer.

The out-of-roundness is determined as the difference between the measured maximum and minimum outside diameters of the same cross-section at 0.1 mm. The check is to be performed immediately after production.

H 7 Pipe connections and seals

The pipes are welded under one another or together using form fittings according to ZP 10.25.1/8 in conformity with DVS 2207 part 11.

For the purposes of initial approval, verification must be provided of the welding strength in the form of a creep inner pressure test at two dimensions per product group (95°C; t > 165 h; SDR 7.4: 13 bar / SDR 9: 10.2 bar/ SDR 11: 8.2 bar / SDR 17: 5.1 bar).

H 8 Delivery form, Packaging, Transport, Storage

The pipes are supplied in straight lengths.

H 9 Processing and laying guidelines

The pipe manufacturer is required to issue supplementary information about laying in the case of laying measures which go over and beyond the specifications of the DIN standards, DVGW worksheets and KRV laying instructions.

H 10 Minimum marking

All the pipes are to be marked continuously and permanently (embossing/laser/print) - at intervals of about 1 m - with the minimum information indicated in Table H 3.

Table H 3 Minimum marking of the pipes

Designation	Sample marking
Name and/or trademark of the manufacturer	xyz
Quality mark for plastic pipes with a register number	P1R0000
KRV trademark (obligatory)	[1]
Product standard	Dimensions according to DIN 8077 / DIN EN ISO 21003
Material and designation (every layer)	PP-RCT / PP-RCT-GF / PP-RCT
Nominal-outside diameter x nominal thickness	20 × 2,8
SDR series or pipe series S	SDR 7,4
Application class combined with operating pressure	class 5 / 6 bar
Drinking water application (if requirements are fulfilled)	TW
Manufacturer's details (by name or encrypted) Machine number Production periode Production centre (if there are more than one)	 8 21/11/2014 Berlin

[1] observing licensing rights

H 11 Material/goods inward check

The material tests (TT, BRT/PVT, AT) are grouped in Table H 4.

Table H 4 Material test (per moulding compound)

Property	Require-ments for	Requirement (Parameter)	Type test (TT)	Internal monitoring (PVT)		External monitoring (AT)
			Initial type testing (ITT)	Test confirmation (according to DIN EN 10204)	Spot checks	
Melt flow index (MFR) PP-RCT	Annex H	≤ 0,5 g/10min (2,16 kg; 230 °C; DIN EN ISO 1133)	-	-	X	-
Colour	Annex H	Primary colour greenish RAL 6025 bzw. primary colour greyish RAL 7042 or RAL 7032; others permissble	-	Factory confirmation 2.1	-	-
Confirmation of hygienic con-formity [a]	KTW-guide-lines	Granule fulfilles KTW-guideline	-	Factory confirmation 2.1	-	-
Odour and taste test on the granulate	KTW-guide-lines	Assessment 1: no impairment to odour /taste	-	Factory confirmation 3.1	-	-
Microbiological testings [a]	DVGW W 270	fulfilles DVGW W 270; to be verified every 5 years	-	Factory confirmation 2.1	-	-
MFR: PP-RCT - GF	Annex H	0,2 - 1,4 g/10min (2,16 kg;230 °C; DIN EN ISO 1133)	-	Factory confirmation 3.1	X	-
PP-RCT - GF: Fibre glass con-tent	Annex H	≥ 12 %; Consistency of deliveries	-	Acceptance test certificate 3.1	-	-

[a] Only to be performed if the pipes are to be used for drinking water applications and are marked accordingly.

H 12 Pipe-, Connector- and pipe system test

The pipe-, connector- and pipe system tests (TT, BRT/PVT, AT) are grouped in Table H 5.

The (external) tests should be carried out on the dimensions/types/groups which have not previously been selected for a surveillance test (AT).

The tests should be carried out on the largest production volume for each group.

Table H 5 Pipe-, Connector- and pipe system test

Property [c]		Require-ment for	Requirement (Parameter)	Type test (TT) per moulding compound				Internal monitoring (BRT/PVT)	External monitoring (AT)
				Testing to be conducted at [a, b]				Factory production control [see 7.1]	Monitoring test [see 5.2.3]
				N (ITT)	D	M	E		
Pipe tests									
Condition		Annex H ISO 15874	smooth, clean, free from bub-bles/scores Ends of pipes: vertical, burr-free	1x / PG	X	X	X	1x / Extr. / DN / every 3 h	1x / half-year/ PG/ PS [h]
Colour		Annex H ISO 15874	Primary colour greenish RAL 6025 bzw. primary colour greyish RAL 7042 or RAL 7032; others permissble	1x / PG	X	X	X	1x / Extr. / DN / every 3 h	1x / half-year / PG/ PS [h]
Geometric properties		Annex H ISO 15874	acc. to factory standard; dev. to 0,2 s (s≤10 mm) bzw. 0,15 s (s>10 mm)	1x / PG	-	X	X	1x / Extr. / DN / every 3 h	1x / half-year / PG/ PS [h]
Heat treatment/ Longitudinal rever-sion		Annex H ISO 15874	≤ 1 % (200/100 mm; 135 °C; s<8 mm:60 min; s>8 mm: 120 min;s>16 mm:240 min)	1x / PG	-	X	X	1x / Extr / DN / startup + at least 1x weekly per FM	1x / half-year / PG/ PS [h]
Creep in-ternal pressure behaviour	95°C >165h	Annex H ISO 15874	t > 165 h (95°C; SDR 7,4/ 13 bar; 9/ 10,2 bar; 11/ 8,2 bar; 17/ 5,1 bar)	-	-	-	X	1x / Extr. / DN / startup at least 1x weekly per FM [c f]	-
	95°C >1000h	Annex H ISO 15874	t > 1000h (95°C; SDR 7,4/ 12,5 bar; 9/ 9,7 bar; 11/ 7,1 bar; 17/ 4,9 bar)	1x / PG	-	X	-	1x / year (->AT)	1x / half-year / PG / PS (3 samples) [c f h]
Confirmation of hy-gienic conformity [e]		KTW guide-lines	Material fulfilles KTW guideline	1x / min wall thickness	-	X	-	-	1x / year / FM
Marking		Annex H ISO 15874	see Table H 3	-	-	-	-	1x / Extr. / DN / 8 h	1x / half-year / PG/ PS [h]
Length change fac-tor		Annex H	≤ 0,1 mm/m K (L≥1 m; Temp.-Dif-ferece 50 K)	1x / PG	-	X	-	-	-
Resistance to impact stress		Annex H	TIR ≤ 10 % (10 samples; 0 °C; height/weight/diameter acc. to Factory standard; ISO 9854; EN 744)	1x / PG [d]	-	X	X	1x / Extr. / DN / startup at least 1x weekly per FM	1x / half-year / PG / PS
Melt flow rate (MFR) PP-RCT		Annex H	Deviation pipe/Granulat max. 20 % (bzw. max. 0,1 g/min)	1x / PG	-	X	X	1x / DN / FM at least 1x weekly per extruder	1x / half-year / PG / PS
Melt flow rate (MFR) PP-RCT - GF		Annex H	Deviation pipe/Granulat acc. to factory standard	1x / PG	-	X	X	1x / DN / FM at least 1x weekly per extruder	1x / half-year / PG / PS
Welding strength		Annex H	Creep test on the welded connection (95 °C; t > 165 h)	1x on 2 DN per PG	-	X	-	-	-

Property [c]	Require-ment for	Requirement (Parameter)	Type test (TT) per moulding compound				Internal monitoring (BRT/PVT)	External monitoring (AT)
			Testing to be conducted at [a, b]				Factory production control [see 7.1]	Monitoring test [see 5.2.3]
			N (ITT)	D	M	E		
Tests of suitability for use on the piping system								
Resistance to internal pressure	Annex H ISO 15874	> 1000 h (Temperature and pressure acc. ISO 15874; ISO 1167)	1x / PG	-	X	-	-	-
Leak tightness to internal pressure and flexural stress	Annex H ISO 15874	> 1 h (20°C; pressure acc. to ISO 15874-5; EN 713)	1x / PG	-	X	-	-	-
Resistance to extraction	Annex H ISO 15874	> 1 h (23°C + Tmax; Tensile strength acc. ISO 15874-5; EN 712)	1x / min wall thickness	-	X	-	-	-
Resistance to Thermal cycling	Annex H ISO 15874	5000 cycles per 30 min [DN>63mm: 2500 per 60 min] (temperature and pressure acc. to ISO 15874-5; 3 samples; EN 12293)	1x / PG	-	X	-	-	-
Resistance to pressure cycling	Annex H ISO 15874	10000 cycles (~30 Zykl./min; 23°C; Druck acc. to ISO 15874-5; 3 samples; EN 12295)	1x / PG/ constr. type [g]	-	X	-	-	-
Leak tightness of under pressure	Annex H ISO 15874	> 1 h (23°C; -0,8 bar; 3 samples; EN 12294)	1x / PG/ constr. type [g]	-	X	-	-	-
Joint test	Annex H	t > 165 h / 1000 h; Creep test on welded connection (95 °C; could be tested together with pipe and fitting)	1x / PG	X	X	X	1x / month [c]	1x /half-year/ PG/PS [c h]

[a] N: New system [initial test, see section 5.2.1] M: Change of moulding compound [supplementary test, see section 5.2.2]
E: Extension of the product range [supplementary test, see section 5.2.2] D: Extension of the product range [supplementary test, see section 5.2.2]

[b] The certification applies through to the largest dimension tested during initial supplementary inspection. Furthermore, verification must be provided of creep tests conducted on 100 representative pipe samples for the entire production batch for the purposes of initial inspection.

[c] Approval may be given after > 165 h; if creep failure occurs in < 165 h, three further samples are to be tested for > 1000 h. In the event of failure in < 1000 h, the products are to be rejected.

[d] testing is conducted on the weakest size(largest permissible SDR)

[e] only in applications involving drinking water

[f] EG 153/ DN>200: 1x sample per year

[g] The different designs (des.) can be found in ISO 17456

[h] If there are no negative results three times in a row, the monitoring frequency is set to once a year. If there are negative results, the monitoring frequency of the PG is restored.

The resistance to impact load is carried out according to DIN EN 744 and Table H 6.

Table H 6 Molt and heights of fall of the falling weight for pipe series SDR 7,4 to SDR 17

Outside diameter d in mm	20	25	32	40	50	63	75
Molt m in kg	-	-	0,25	0,25	0,5	0,5	0,8
Height of fall h in mm	400	500	600	800	1000	1000	1200
Falling weigth type	d25						

outside diameter d in mm	90	110	125	140	160	180	200	225	250	280	315
Molt m in kg	1,0	1,6	2,5	2,5	3,2	3,2	4,0	4,0	5,0	5,0	6,3
Height of fall h in mm	2000	2000	2000	1800	2000	1800	2000	1800	2000	1800	2000
Falling weigth type	d90										

H 13 Number of samples

The number of samples to be taken for the monitoring test is shown in Table H 7.

Table H 7 Minimum number of samples to be taken for the monitoring test (type test may require more samples)

Product group (see section 4.1)	Mechanical/physical examinations		Hygiene examinations number of samples and length
	Number of samples	Length L per sample	
151 (<75 mm)	10 + 3 retained samples	1000 mm	$d_e \leq 32$ mm: 15 x 1m 32 mm < $d_e \leq 50$ mm: 6 x 1m 50 mm < $d_e \leq 110$ mm: 4 x 1m 110 mm < d_e : 4 x 0,5m
152 (<250 mm)	10 + 3 retained samples	1000 mm	
153 (≥250 mm)	10 + 3 retained samples	1000 mm	

H 14 Consequence in the event of deviations

If the requirements are not met, the causes must be assessed and rectified, and the check must be repeated.
As a rule, products which do not meet the specified requirements are to be rejected.

Creep inner pressure behaviour:
5 pipe samples must be taken from each extruder and material type at least once a week as well as after start-up during factory production control. The check is to be conducted on a pipe sample. If a creep failure is discovered before the requirement is satisfied, three further pipe samples (consecutive samples from the same production batch) must be subjected to test conditions of 95 °C / > 1000 h. Failure may not occur in fewer than 1000 h. If a creep failure occurs within 1000 h in the case of one of the subsequent samples, the production batch in question must be rejected until the next test is passed.

If creep failure occurs with ductile failure/fracture (tension fracture) within 165 hours in the course of the monitoring test, the company is to be requested to provide three reserve samples from the associated sampling process. In that case, the internal pressure creep test is then to be performed during those subsequent checks with an operating time of 1000 hours. All three pipe samples must achieve a minimum operating time ≥ 1000 hours.

Annex I ZP 9.18.1 - Pressure pipes made from PP-RCT with coating made from AL/PP-R

(Edition: 17.03.2015)

I 1 Inspection and certification principles (also refer to section 2)

DIN 8077	Polypropylene (PP) pipes - PP-H, PP-B, PP-R, PP-RCT – Dimensions; DIN 8077:2008-09
DIN 8078	Polypropylene (PP) pipes - PP-H, PP-B, PP-R, PP-RCT – General quality requirements and testing; DIN 8078:2008-09
DIN EN ISO 15874-2	Plastic piping systems for hot and cold water installations - Polypropylene (PP) - Part 2: Pipes (ISO 15874-2:2013); German and English version EN ISO 15874-2:2013-06
DIN EN 10204	Metallic products - Types of inspection documents; German version EN 10204:2005-01

I 2 General

Annex I (ZP 9.18.1) of this certification scheme applies to seamless multi-layer plastic pipe systems made from PP-RCT-Aluminium, for which the quality sign “DIN*plus“* from DIN CERTCO is provided. The quality enhancement is summarized in Table I 1.

Table I 1 Quality enhancement

Requirements	**Anng I ZP 9.1ex.1**	DIN 8077	DIN 8078	DIN 16836	DIN EN ISO 15874-2	Refer to:
Participation in the Plastic Pipe Association (KRV) recycling system	+	-	-	-	-	Section 1.2
MFR PP-RCT 230/2.16 ≤ 0,5 g/10 min	+	-	-	-	-	Annex I
MFR PP 230/2.16 ≤ 0,5 g/10 min	+	-	-	-	-	Annex I
MFR tolerance granule/pipe ≤20 % bei 230 °C/ 2,16 kg (max. 0,1 g / 10 min)	+	-	-	max 0,2 g / 10 min	≤ 30 % ; max 0,16 g / 10 min	Annex I

The pipes are used as a pressure pipe, e.g. for industry and air-conditioning construction conforming to DIN 16836, as a plumbing pipe conforming to DIN EN 15874-2 or as a general pressure pipe for further areas of application.

If the pipes conform to the "Guidelines on the hygienic assessment of organic materials in contact with drinking water (KTW guidelines)" and are marked with the application designation TW (i. e. suitable for drinking water), they may also be used in drinking water applications.

I 3 Product groups

The product groups are shown in Table I 2. If all the requirements are met, certificates are issued for each product group and production facility.

Table I 2 Product groups

Product group	Product type	Nominal diameter (DN/OD)
141	Pipes	d < 75 mm
142		75 mm ≤ d < 250 mm
143		250 mm ≤ d < 710 mm

I 4 Substance / materials used

Composite pipes made from PP-RCT aluminium, consisting of a PP-RCT medium pipe, an aluminium pipe and a PP pipe casing.

The internal pressure creep rupture strength of the pipes in this certification scheme is determined exclusively by the PP-RCT medium pipe (in contact with the medium/fluid on the inside). The medium pipe or the inner layer is made from PP-RCT conforming to DIN 8077/78.

The aluminium pipe reduces the change in length of the complete pipe and increases the flexural strength. During extrusion, an aluminium strip is shaped into a pipe and is stuck lengthwise with continuous overlapping. The aluminium pipe or the middle layer consists of an aluminium strip made from a non-thermosetting aluminium plastic alloy conforming to EN 573-3 which is connected to the pipe casing and medium pipe by a PP coating. The bonding strength of the aluminium strip coating is > 5N/15 mm.

The pipe casing is the outer part of the composite pipe. It encloses the aluminium pipe and protects it against damage from outside. The pipe casing or the outer layer is made from PP conforming to DIN 8077/78.

The verification of the long-term stability of the PP materials used (internal pressure creep behaviour) must be recorded in accordance with the procedure defined in DIN EN ISO 9080 or DIN 16887. The internal pressure creep behaviour determined in this way may not exceed the reference characteristics (minimum curves) specified in DIN 8078 at any point.

The pipe manufacturer must ensure that the documents are submitted to DIN CERTCO by the respective raw material producer for each type of material. This also applies to the PP-coated aluminium strip used in the intermediate layer. It is to be specified by the manufacturer and submitted to DIN CERTCO.

New material is to be used for the manufacture of multi-layer pipes. The use of recycled material of the same type as that used in the pipe manufacturer's pressure pipe production, as well as of return material type A is permissible (100% permitted). Reclaimed and recycled material may not be used.

I 5 Production

The process for the manufacture of pipes and fittings must ensure even and reproducible production conditions, as well as be documented in accordance with the factory regulations of the pipeline part manufacturer.

The correlation between the test batch and the date of manufacture must be established by factory records. The types of materials used must be entered in these records.

The extruder settings must be monitored; a record is to be kept of important parameters.

I 6 Dimensions

The outside diameters and total wall thicknesses, as well as individual layers and out-of-roundness of the composite pipes are governed by the factory standards which have been approved by DIN CERTCO and are kept on file there.
The outside diameters and wall thicknesses of the medium pipes remaining after the removal of the aluminium pipe and casing layers must conform to DIN 8077.

(Current versions of) the relevant factory standards will apply with regard to the wall thicknesses of the outer, intermediate and inner layer of the pipes. It must be approved by DIN CERTCO and be saved there. The individual cases where the total wall thickness s is exceeded may be +0.2 s at s ≤ 10 mm and +0.15 s at s > 10 mm. The average of the total wall thickness must lie within the permissible limit dimensions. The wall thicknesses may not be below the permissible threshold.

The thickness of the individual layers of the cross-section of the pipe is determined using a measuring microscope. Other appropriate processes are permissible.
The outside diameter s is determined using a circometer.

The out-of-roundness is determined as the difference between the measured maximum and minimum outside diameters of the same cross-section at 0.1 mm. The check is to be performed immediately after production.

I 7 Pipe connections and seals

Pipes and fittings under this certification scheme are welded to one another in accordance with DVS 2207 part 11.

I 8 Delivery form, Packaging, Transport, Storage

The pipes are supplied in straight lengths.

I 9 Processing and laying guidelines

The pipe manufacturer is required to issue supplementary information about laying in the case of laying measures which go over and beyond the specifications of the DIN standards, DVGW worksheets and KRV laying instructions.

I 10 Minimum marking

All the pipes are to be marked continuously and permanently (embossing/laser/print) - at intervals of about 1 m - with the minimum information indicated in Table I 3.

Table I 3 Minimum marking of the pipes

Designation	Sample marking
Name and/or trademark of the manufacturer	xyz
Quality mark for plastic pipes with a register number	P1R0000
KRV trademark (obligatory)	[1]
Product standard	DIN 16836 / ISO 15874 / DIN 8077/78
Material and designation (every layer)	PP-RCT / AL / PP-RCT
Nominal-outside diameter x nominal thickness	20 x 2,8
SDR series (Nominal diameter /Total wall thickness ratio)	SDR 7,4
Application class combined with operating pressure	class 1 / 10 bar
Abmessungsklasse	A
Manufacturer's details (by name or encrypted) Machine number Production period Production centre (if there are more than one)	 8 21/11/2012 Berlin

[1] observing licensing rights

I 11 Material/goods inward check

The material tests (TT, BRT/PVT, AT) are grouped in Table I 4.

Table I 4 Material test (per moulding compound)

Property	Require-ments for	Requirement (Parameter)	Type test (TT)	Factory Production Control FPC (PVT)		Monitoring (AT)
			Initial type testing (ITT)	Test confirmation (according to DIN EN 10204)	Spot checks	
PP-RCT material testing (Inner layer / Medium pipe)						
Long-term stability verification PP-RCT	DIN 8078	Not below lower limits for reference characteristics (ISO 9080 / DIN 16887)	-	Factory confirmation 3.1	-	-
Melt mass-flow rate (MFR) PP-RCT	DIN EN ISO 1133	≤ 0,5 g/10min (2,16 kg;190 °C; DIN EN ISO 1133)	-	1x / Delivery / batch-No. of Factory confirmation 3.1	X	-
Propotion of volatile constituents or moisture content	DIN EN 12099	≤ 0,035 % percently by weight (DIN EN 12099)	-	1x / Delivery / batch-No. of Factory confirmation 3.1	X	-
	DIN EN 12118	≤ 0,03 % percently by weight (DIN EN 12118)	-	1x / Delivery / batch-No. of Factory confirmation 3.1	X	-
Colour	RAL	Primary colour green (~RAL 6025) resp. Primary colour grey (~RAL 7042); others permissible	-	Factory confirmation 2.1	-	-
Confirmation of hygienic con-formity [a]	KTW-guide-lines	Granule according to KTW-guidelines	-	Factory confirmation 2.1	-	-
Odour and taste test on the granulate [a]		Assessment factor 1: no impairment to odour / taste	-	Factory confirmation 3.1	-	-
Microbiological testings [a]	DVGW W 270	fulfilles DVGW W 270	-	Factory confirmation 2.1	-	-
PP-RCT – material testing (Outer layer / outer pipe)						
Long-term stability verification PP	DIN 8078	Not below lower limits for reference characteristics (ISO 9080 / DIN 16887)	-	Factory confirmation 2.1	-	-
Melt mass-flow rate (MFR) PP	DIN EN ISO 1133	≤ 0,5 g/10min; rounded to 0,1g/10min; (2,16 kg;190 °C; DIN EN ISO 1133)	-	1x / Delivery / batch-No. of Factory confirmation 3.1	X	-
Propotion of volatile constituents or moisture content	DIN EN 12099	≤ 0,035 % percently by weight (DIN EN 12099)	-	1x / Delivery / batch-No. of Factory confirmation 3.1	X	-
	DIN EN 12118	≤ 0,03 % percently by weight (DIN EN 12118)	-	1x / Delivery / batch-No. of Factory confirmation 3.1	X	-
Colour	RAL	Primary colour greenish RAL 6025 resp. primary colour greyish RAL 7042; others permissible	-	Factory confirmation 2.1	-	-

Property	Require-ments for	Requirement (Parameter)	Type test (TT)	Factory Production Control FPC (PVT)		Monitoring (AT)
			Initial type testing (ITT)	Test confirmation (according to DIN EN 10204)	Spot checks	
Aluminium strip – material testing						
Type of material	EN 573-3	AL ;n1 Mg0,5	-	1x / Delivery Factory confirmation 3.1	-	-
Aluminium strip thickness	EN 546-3	150 µm ± 9 µm	-	1x / Delivery Factory confirmation 3.1	-	-
Aluminiumband width		according to factory standard	-	1x / Delivery Factory confirmation 3.1	-	-
Weight per unit area PP-coating		40 g/cm³ ± 5 g/cm³	-	1x / Delivery Factory confirmation 3.1	-	-
adhesion promoter Melting point	DIN 16836	≥ 120 °C	-	1x / Delivery Factory confirmation 3.1	-	-
[a] Only to be performed if the pipes are to be used for drinking water applications and are marked accordingly.						

I 12 Pipe-, Connector- and pipe system test

The pipe tests (TT, BRT/PVT, AT) are grouped in Table I 5.

The (external) checks should be carried out on the dimensions/types/groups which have not previously been selected for a monitoring test (AT).

The checks should be carried out on the largest production volume for each group.

Table I 5 Pipe-, Connector- and pipe system test

Property		Require-ments for	Requirement (Parameter)	Type test (TT) per moulding compound				Internal monitoring (BRT/PVT)	External monitoring (AT)
				Testing to be conducted at [a, b]				Factory production control [see 7.1]	Monitoring test [see 5.2.3]
				N (ITT)	D	M	E		
Pipe tests									
Appearance		Annex I ISO 15874	smooth, clean, free from bubbles/scores Ends of pipes: vertical, burr-free	1x / PG	X	X	X	1x / Extr. / DN / every 3 h	1x / half-year/ PG/ PS [h]
Colour		Annex I ISO 15874	Primary colour green (~RAL 6025) resp. Primary colour grey (~RAL 7042) or RAL 7032; others permessible	1x / PG	X	X	X	1x / Extr. / DN / every 3 h	1x / half-year / PG/ PS [h]
Dimensions		Annex I ISO 15874	acc. to Factory standard; dev. to 0,2 s (s≤10 mm) bzw. 0,15 s (s>10 mm)	1x / PG	-	X	X	1x / Extr. / DN / every 3 h	1x / half-year / PG/ PS [h]
Heat treatment/ Longitudinal rever-sion		Annex I ISO 15874	≤ 1 % (200/100 mm; 135 °C; s<8 mm:60 min; s>8 mm: 120 min;s>16 mm:240 min)	1x / PG	-	X	X	1x / Extr / DN / startup + min. 1x weekly per FM	1x / half-year / PG/ PS [h]
Re-sistance to internal pressure	95°C >165h	Annex I ISO 15874	t > 165 h (95°C; SDR 7,4 / 13,1 bar; 9 / 10,2 bar)	-	-	-	X	1x / Extr. / DN / week [c f]	-
	95°C >1000h	Annex I ISO 15874	t > 1000 h (95°C; SDR 7,4 / 12,4 bar; 9 / 9,6 bar)	1x / PG	-	X	-	1x / year (->AT)	1x / half-year / PG / PS (3 samples) [c f h]
Hygienic conformity [e]		KTW guide-lines	Material fulfilles KTW guidelines	1x / min wall thickness	-	X	-	-	1x / year / FM
Designation		Annex I ISO 15874	see Table I 3	-	-	-	-	1x / Extr. / DN / 8 h	1x / half-year / PG/ PS [h]
Length variation factor		Annex I	≤ 0,1 mm/m K (L≥1 m; Temp.-difference 50 K)	1x / PG	-	X	-	-	-
Resistance to pull-out (up to Ø 32 mm)		ISO 9584-1/-2	TIR ≤ 10 % (10 samples; 0 °C; ISO 9584-1/-2; EN 744)	1x / PG [d]	-	X	X	1x / Extr. / DN / startup min. 1x weekly per FM	1x / half-year / PG / PS [h]
Melt mass-flow rate (MFR) PP-RCT		Annex I	Tolerance pipe/granule max. 20 %	1x / PG	-	X	X	1x / DN / FM min. 1x weekly per Extruder	1x / half-year / PG/ PS [h]
Stripping dimension test		Annex I DIN 8077	outside diameter and wall thickness acc. DIN 8077	1x / PG	-	X	X	1x / Extr / DN / startup + every 8h	1x / half-year / PG/ PS [h]
Separation test encl. composite pipe		Annex I DIN 16836	Adhesion strength ≥ 20 N/cm (DIN 16836 Annex D/ Analysis upon average stripping force acc. to DIN 503357 Abschn. 7)	1x / PG	-	X	X	1x / Extr / DN / startup + every 8h	1x / half-year / PG/ PS [h]

Property	Require-ments for	Requirement (Parameter)	Type test (TT) per moulding compound				Internal monitoring (BRT/PVT)	External monitoring (AT)
			Testing to be conducted at [a, b]				Factory production control [see 7.1]	Monitoring test [see 5.2.3]
			N (ITT)	D	M	E		
Separation test encl. composite pipe	Annex I DIN 16836	Adhesion stregth ≥ 15 N/cm (acc. to immersion- temp-cycling-test ; DIN 16836 Annex D/ Analysis upon average stripping force acc. to DIN 503357 Abschn. 7)	1x / PG	-	X	-	-	-
Welding strength	Annex I	Creep test on welded connection (95 °C; t > 165 h)	1x an 2 DN per PG	-	X	-	-	-
Tests of suitability for use on the piping system								
Resistance to internal pressure	Annex I ISO 15874	> 1000 h (temperature and pressure acc. to ISO 21003-5; ISO 1167)	1x / PG	-	X	-	-	-
Leak tightness under internal pressure and Flexural stress	Annex I ISO 15874	> 1 h (20°C; pressure acc. to ISO 21003-5; EN 713)	1x / PG	-	X	-	-	-
Resistance to extraction	Annex I ISO 15874	> 1 h (23°C + Tmax; tesnsile force acc. ISO 21003-5; EN 712)	1x / min wall thickness	-	X	-	-	-
Resistance to thermal cycling	Annex I ISO 15874	5000 cycles á 30 min [DN>63mm: 2500 á 60 min] (temperature and pressure acc. to ISO 21003-5; 3 sampels; EN 12293)	1x / PG	-	X	-	-	-
Resistance to pressure cycling	Annex I ISO 15874	10000 cycles (~30 Zykl./min; 23°C; pressure acc. to ISO 21003-5; 3 sampels; EN 12295)	1x / PG/ constr. type [g]	-	X	-	-	-
Leak tightness under pressure	Annex I ISO 15874	> 1 h (23°C; -0,8 bar; 3 sampels; EN 12294)	1x / PG/ constr. type [g]	-	X	-	-	-
Connection test	Annex I	t > 165 h / 1000 h; Creep test on welded connection (95 °C; should be tested together with pipe-/fitting)	1x / PG	X	X	X	1x / month [c]	1x /half-year/ PG/PS [c h]

[a] N: New system [initial test, see section 5.21] M: change of moulding compound [supplementary test, see section 5.2.2]
E: Extension of the product range [supplementary test, see section5.2.2] D: Change of design [supplementary test, see section 5.2.25.2.2]

[b] The certification applies through to the largest dimension tested during initial testing/supplementary testing. Furthermore, verification must be provided of creep tests conducted on 100 representative pipe samples for the entire production batch for the purposes of initial testing.

[c] Approval may be given after > 165 h; if creep failure occurs in < 165 h, three further samples are to be tested for > 1000 h. In the event of failure in < 1000 h, the products are to be rejected.

[d] testing is conducted on the weakest size (largest permissible SDR)

[e] Only in application involving drinking water

[f] EG 143/ DN>200: 1x yearly one sample

[g] The different designs (des.) can be found in ISO 17456

[h] If there are no negative results three times in a row, the monitoring frequency is set to once a year. If there are negative results, the monitoring frequency of the PG is restored.

The resistance to impact load is carried out according to ISO 9584-1/-2 and Table I 6.

Table I 6 testing requirements for impact resistance (up to ø 32mm)

Pipe ø in mm	Falling weight Type	Molt of falling weight in kg	Testing temperature in °C	Height of fall in m
16	d25	0,25	0	0,3
20	d25	0,25	0	0,6
25	d25	0,25	0	1,0
32	d25	0,5	0	0,6

I 13 Number of samples

The number of samples to be taken for the monitoring test is shown in Table I 7.

Table I 7 Minimum number of samples to be taken for the monitoring test (type test may require more samples)

Product group (see section 4.1)	Mechanical/physical examinations		Hygiene examinations Number of samples and length
	Number of samples	Length L per sample	
141 (<75 mm)	10 + 3 retained samples	1000 mm	$d_e \leq 32$ mm: 15 x 1m 32 mm < $d_e \leq 50$ mm: 6 x 1m 50 mm < $d_e \leq 110$ mm: 4 x 1m 110 mm < d_e : 4 x 0,5m
142 (<250 mm)	10 + 3 retained samples		
143 (≥250 mm)	10 + 3 retained samples		

I 14 Consequences in the event of deviations

If the requirements are not meet, the causes must be assessed and rectified, and the check must be repeated. As a rule, products which do not meet the specified requirements are to be rejected.

Creep inner pressure behaviour:
The check is to be conducted on a pipe sample. If a creep failure is discovered before the requirement is satisfied, three further pipe samples (consecutive samples from the same production batch) must be subjected to test conditions of 95 °C / > 1000 h. Failure may not occur in fewer than 1000 h. If a creep failure occurs within 1000 h in the case of one of the subsequent samples, the production batch in question must be rejected until the next test is passed.

If creep failure occurs with ductile failure/fracture (tension fracture) within 165 hours in the course of the monitoring test, the company is to be requested to provide three reserve samples from the associated sampling process. In that case, the internal pressure creep test is then to be performed during those subsequent checks with an operating time of 1000 hours. All three pipe samples must achieve a minimum operating time ≥ 1000 hours.

Annex J ZP 10.25.1-8 - Pressure pipes and fittings made from PP-RCT (polypropylene random-Copolymerisate) for installation

(Edition: 30.03.2015)

J 1 Inspection and certification principles (also refer to section 2)

DIN 8077	Pipes made from polypropylene (PP) –PP-H, PP-B, PP-R, PP-RCT – Dimensions; DIN 8077:2008-09
DIN 8078	Pipes made from polypropylene (PP) - PP-H, PP-B, PP-R, PP-RCT – General quality requirements and testing; DIN 8078:2008-09
DIN EN ISO 15874-1	Plastics piping systems for hot and cold water installations – Polypropylene (PP) – Part 1: General (ISO 15874-1:2013); German and English version EN ISO 15874-1:2013-06
DIN EN ISO 15874-2	Plastics piping systems for hot and cold water installations - Polypropylene (PP) - Part 2: Pipes (ISO 15874-2:2013); German and English version EN ISO 15874-2:2013-06
DIN EN ISO 15874-3	Plastics piping systems for hot and cold water installations - Polypropylene (PP) - Part 3: Fittings (ISO 15874-3:2013); German and English version EN ISO 15874-3:2013-06
DIN EN ISO 15874-5	Plastics piping systems for hot and cold water installations – Polypropylene (PP) – Part 5: Fitness for purpose of the system (ISO 15874-5:2013); German and English version EN ISO 15874-5:2013
DIN EN 10204	Metallic products - Types of inspection documents; German version EN 10204:2005-01

J 2 General

Annex J (ZP 10.25.1-8) of this certification scheme applies to straight, round and seamless pressure types and to fittings which are produced by injection moulding made from PP-RCT, which are also suitable for connection with composite pipes conforming to ZP 9.18.1 and with composite pipes conforming to ZP 9.12 1 and which are marked with the "DIN*plus"* quality mark from DIN CERTCO. The quality enhancement is summarised in Table J 1.

If the pipes conform to the "Guidelines on the hygienic assessment of organic materials in contact with drinking water (KDW guidelines)" and are marked with the application designation TW (i. e. suitable for drinking water), they may also be used in drinking water applications.

The pipes are used as a pressure pipe, e.g. for industry and air-conditioning construction conforming to DIN 16836, as a plumbing pipe conforming to DIN EN 15874-2 or as a general pressure pipe for further areas of application.

Table J 1 Quality enhancement

Requirements	Annex J ZP 10.5.1-8	DIN 8078	DIN EN ISO 15874-2	Refer to:
Participation in the Plastic Pipe Association (KRV) recycling system	+	-	-	Section 1.2
Goods inward check: MFR PP-RCT	+	-	-	Annex J
Goods inward check: Dry loss	+	-	-	Annex J
Goods inward check: Confirmation of hygienic conformity	+	-	-	Annex J
Goods inward check: Odour and taste test	+	-	-	Annex J
Longitudinal heat reversion: longitudinal shrinkage ≤ 1,5 %	+	-	≤ 2 %	Annex J
Verification of the long-term stability in acc. to DIN 8078	+	+	-	Annex J

J 3 Product groups

The product groups are listed in table J 2 (in accordance to DIN EN ISO 15874-7). If all the requirements are met, certificates are issued for each product group and production facility

Furthermore, the fittings are assigned to the fittings groups: (1) bow, (2) bracket/T-piece, (3) reducer/coupling/cap, (4) screw fitting/flange adapter/transition piece/others.

Table J 2 Product groups

Product group	Product type	Nominal diameter (DN/OD)
131	Pipes	d ≤ 63 mm
132		63 mm < d ≤ 160 mm
133		d > 160 mm
131.1	Fittings	d ≤ 63 mm
132.1		63 mm < d ≤ 160 mm
133.1		d > 160 mm

J 4 Substance / materials used

The pipes and fittings are made of PP-RCT.

The verification of the long-term stability (internal pressure creep behaviour) must be recorded in accordance with the procedure defined in ISO/DIS 9080 or DIN 16887. The internal pressure creep curves determined in this way may not be below the reference characteristics (minimum curves) specified in DIN 8078 at any point. The pressure pipe/fittings manufacturer must ensure that verification of long-term stability for the material used is submitted to DIN CERTCO.

Plastics and sealing materials which come into contact with drinking water in the course of the intended use must conform to the current guidelines set down by the Federal Environmental Protection Agency (UBA).

Successful testing must be performed in accordance with DVGW worksheet W 270 in respect of the hygienic compliance of organic materials with microbiological requirements, in addition to and independent of these guidelines.

New material is to be used for the manufacture of pressure pipes and fittings.
The use of work-in-progress material for the respective processing from the same compound of the pipe and fittings manufacture´s is permissible.
Return material, Reclaimed and recycled material may not be used.

J 5 Production

The process for the manufacture of pipes and fittings must ensure even and reproducible production conditions, as well as be documented in accordance with the factory regulations of the pipeline part manufacturer.

The correlation between the test batch and the date of manufacture must be established by factory records. The types of materials used must be entered in these records

The extruder settings must be monitored; a record is to be kept of important parameters.

J 6 Dimensions

For the outside diameter, wall thickness, out-of-roundnes and lenght of the pressure pipes are dimensions and limit dimensions in accordance to DIN 8077 applyed. The individual cases where the pipe wall thickness is exceeded may be +0.2 s at s ≤ 10 mm and +0.15 s at s > 10 mm. The average wall thickness must lie within the permissible limit dimensions. The wall thicknesses may not be below the permissible threshold.

For fittings function dimensions is DIN EN ISO 15874-3 as well as DIN 16962 Part 2 2 (1983-02) and Part 4 (1988-11) applyed. Any additional measures schoud be laid down in the respective factory standards and to deposit at DIN CERTCO.

J 7 Pipe connections and Seals

Pipes and fittings under this certification scheme are welded to one another in accordance with DVS 2207 part 11.

The fittings are also suitable for connection to composite pipes in accordance with ZP 9.18.1 and to composite pipes in accordance with ZP 9.12.1.

J 8 Delivery form, Packaging, Transport, Storage

The pipes are supplied in straight lengths.

J 9 Processing and laying guidelines

The pipe manufacturer is required to issue supplementary information about laying in the case of laying measures which go over and beyond the specifications of the DIN standards, DVGW worksheets and KRV laying instructions.

J 10 Minimum marking

All the pipes are to be marked continuously and permanently (embossing/laser/print) - at intervals of about 1 m - with the minimum information indicated in Table J 3.

All the fittings are to be marked continuously with the minimum information indi-cated in Table J 4.

Table J 3 Minimum marking of the pipes

Designation	Sample marking
Name and/or trademark of the manufacturer	xyz
Quality mark for plastic pipes with a register number	P1R0000
KRV trademark	[1]
Product standard	DIN 8077/8078 / DIN EN ISO 15874
Material and designation (per each layer)	PP-RCT
Dimensions	50 × 8,4
SDR series (nominal diameter / Total wall thickness ratio)	SDR 7,4
Drinking water application (if requirements are fulfilled)	TW
Pipe dimensions class	A
Application class combined with operating pressure	1 / 10 bar
Manufacturer's details (by name or encrypted) Machine number Production period Production centre (if there are more than one)	 8 21/11/2014 Berlin

[1] observing licensing rights

Table J 4 Minimum marking of the fittings

Designation	Sample marking
Name and/or trademark of the manufacturer	xyz
Quality mark for plastic pipes with a register number	P1R0000
KRV trademark	[1]
Product standard	DIN EN ISO 15874
Material and designation [2]	PP-RCT
Nominal diameter [2]	d 32
Application class combined with operating pressure	1 / 10 bar
Production periode month/year [2]	11/2014

[1] observing licensing rights
[2] This marking must be applied directly to the fitting. All other information may be indicated either directly of the fitting or on a sticker, which is supplied with the fittings.

J 11 Material/goods inward check

The material tests (TT, BRT/PVT, AT) are grouped in Table J 5.

Table J 5 Material testing (per moulding compound)

Property	Require-ments for	Requirement (Parameter)	Type test (TT)	Factory production control FPC (PVT)		Monitoring test (AT)
			Initial type testing (ITT)	Test confirmation (according to DIN EN 10204)	Spot checks	
Melt mass-flow rate (MFR) PP-RCT	DIN EN ISO 1133	≤ 0,5 g/10min (2,16 kg;190 °C; DIN EN ISO 1133)	-	1x / delivery / charge-No. of factory confirmation 3.1	X	-
Colour	RAL	Primary colour greenish RAL 6025 bzw. primary colour greyish RAL 7042 or RAL 7032; others permissble	-	Factory confirmation 2.1	X	-
Hygienic conformity [a]	KTW guideline	granulate conforming to KTW-Guidlines (Migration test; DIN EN 12873)	-	Factory confirmation 2.2	-	-
Odour and taste test on the granulate [a]	KTW guideline	Assessment factor 1: no impairment to odour / taste (compr. to DIN EN 1420; DIN EN 1622)	-	Factory confirmation 3.1	-	-
Microbiological testings [a]	DVGW W 270	fulfilles DVGW W 270	-	Factory confirmation 2.1	-	-

[a] Only to be performed if the pipes are to be used for drinking water applications and are marked accordingly.

J 12 Pipe-, Connector- and pipe system test

The pipe tests (TT, BRT/PVT, AT) are grouped in Table J 6.

The (external) checks should be carried out on the dimensions/types/groups which have not previously been selected for a monitoring test (AT).

The checks should be carried out on the largest production volume for each group.

Table J 6 Pipe-, Connector- and pipe system test

Property		Require-ments for	Requirement (Parameter)	Type test (TT) per moulding compound				Internal monitoring (BRT/PVT)	External monitoring (AT)
				Testing to be conducted at [a, b]				Factory production control [see 7.1]	Monitoring test [see 5.2.3]
				N (ITT)	D	M	E		
Pipe testings:									
Condition		Annex J ISO 15874	smooth, clean, free from bub-bles/scores Ends of pipes: vertical, burr-free	1x / PG	X	X	X	1x / Extr. / DN / all 3 h	1x / half-year/ PG/ PS [h]
Colour		Annex J ISO 15874	Primary colour greenish RAL 6025 bzw. primary colour greyish RAL 7042 or RAL 7032; others permissble	1x / PG	X	X	X	1x / Extr. / DN / all 3 h	1x / half-year / PG/ PS [h]
Dimensions		Annex J ISO 15874	acc. to Factory standard; Dev. to 0,2 s (s≤10 mm) and 0,15 s (s>10 mm)	1x / PG	-	X	X	1x / Extr. / DN / all 3 h	1x / half-year / PG/ PS [h]
Heat reversion/ Longitudinal reversion		Annex J ISO 15874	≤ 1,5 % (200/100 mm; 135 °C; s<8 mm:60 min; s>8 mm: 120 min;s>16 mm:240 min)	1x / PG	-	X	X	1x / Extr / DN / Startup + min. 1x weekly per FM	1x / half-year / PG/ PS [h]
Creep in-ternal pressure behaviour	95°C >165h	Annex J ISO 15874	t > 165 h (4,0 MPa)	-	-	-	X	1x / Extr. / DN / week [c i]	-
	95°C >1000h	Annex J ISO 15874	t > 1000h (3,8 MPa)	1x / PG	-	X	-	1x / Year	1x / half-year / PG / PS (3 samples) [c h i]
Resistance to im-pact load (e<20mm)		Annex J	H50 > 1 m (0 °C; DIN EN 1411)	1x / PG	-	X	X	1x / Extr. / DN / Startup min. 1x weekly per FM (falling weight or Impact bending test)	1x / half-year / PG/PS [h]
		Annex J ISO 15874	TIR ≤ 10 % (10 samples; 0 °C; Impact bending test ISO 179/ ISO 9854)	1x / PG	-	X	X		
Melt flow rate (MFR) PP-RCT		Annex J ISO 15874	≤ 0,5 g/10 min; deviation pipe/granulate max. 30 % and 0,2 g/10 min (230 °C; 2,16 kg; DIN ISO 1133)	1x / PG	-	X	X	1x / DN / FM min. 1x weekly per Extruder	1x / half-year / PG/ PS [h]
Hygienic conformity [e]		KTW guide-line	Materials fulfill KTW guideline	1x / min wall thickness	-	X	-	-	1x / year / FM
Designation		Annex J ISO 15874	see table J 3	-	-	-	-	1x / Extr. / DN / 8 h	1x / half-year / PG / PS [h]

Property	Require-ments for	Requirement (Parameter)	Type test (TT) per moulding compound				Internal monitoring (BRT/PVT)	External monitoring (AT)
			Testing to be conducted at [a, b]				Factory production control [see 7.1]	Monitoring test [see 5.2.3]
			N (ITT)	D	M	E		
Testing on fittings:								
Condition	Annex J ISO 15874	smooth, clean, free from bub-bles/scores Ends of pipes: vertical, burr-free	1x / FSG / PG	X	X	X	1x / Extr. / DN / every 3 h	1x / half-year/ PG/ PS [h]
Colour	Annex J ISO 15874	Primary colour greenish RAL 6025 bzw. primary colour greyish RAL 7042 or RAL 7032; others permissble	1x / FSG / PG	X	X	X	1x / Extr. / DN / every 3 h	1x / half-year / PG/ PS [h]
Dimensions	Annex J ISO 15874	acc. to factory Standard; dev. to 0,2 s (s≤10 mm) and 0,15 s (s>10 mm)	1x / FSG / PG	-	X	X	1x / Extr. / DN / every 3 h	1x / half-year / PG/ PS [h]
Melt flow rate (MFR) PP-RCT	Annex J ISO 15874	≤ 0,5 g/10 min; Deviation pipe/ granulate max. 30 % bzw. 0,2 g/10 min (230 °C; 2,16 kg; DIN ISO 1133)	1x / FSG / PG	-	X	X	1x / DN / FM min. 1x weekly per machine	1x / half-year / PG/ PS [h]
Creep internal pres-sure behaviour	Annex J ISO 15874	t>1000 h (95 °C; 12,9 bar)	1x / FSG / PG	-	X	X	1x / FM / DN / Month [i]	1x / half-year / PG/ PS (3 samples) [i h]
Hygienic conformity [e]	KTW guide-line	Material fulfilles KTW guideline	1x / FM	-	X	X	-	1x / year / PG/ PS [h]
Designation	Annex J ISO 15874	see Table J 4	-	-	-	X	1x / machine / DN / 8 h	1x / half-year / PG/ PS [h]
Tests of suitability for use on the piping system:								
Resistance to Internal pressure	Annex J ISO 15874	> 1000 h (temperature and pressure acc. ISO 21003-5; ISO 1167)	1x / PG	-	X	-	-	-
Density to internal pressure and flexural stress	Annex J ISO 15874	> 1 h (20°C; pressure acc. to ISO 21003-5; EN 713)	1x / PG	-	X	-	-	-
Resistance to Extraction	Annex J ISO 15874	> 1 h (23°C + Tmax; tensile force acc. to ISO 21003-5; EN 712)	1x / min wall thickness	-	X	-	-	-

Property	Require-ments for	Requirement (Parameter)	Type test (TT) per moulding compound				Internal monitoring (BRT/PVT)	External monitoring (AT)
			Testing to be conducted at [a, b]				Factory production control [see 7.1]	Monitoring test [see 5.2.3]
			N (ITT)	D	M	E		
Resistance to thermal cycling	Annex J ISO 15874	5000 cycles á 30 min [DN>63mm: 2500 á 60 min] (temperature and pressure acc. ISO 21003-5; 3 samples; EN 12293)	1x / PG	-	X	-	-	-
Resistance to pressure cycling	Annex J ISO 15874	10000 cycles (~30 cycl./min; 23°C; pressure acc. ISO 21003-5; 3 samples; EN 12295)	1x / PG/ des. [g]	-	X	-	-	-
Leak tightness on under pressure	Annex J ISO 15874	> 1 h (23°C; -0,8 bar; 3 samples; EN 12294)	1x / PG/ des. [g]	-	X	-	-	-
Connection test	Annex J	t > 165 h / 1000 h; Creep test on welded connection (95 °C; could be tested together with pipe- and fitting)	1x / PG	X	X	X	1x / month [c]	1x /half-year/PG/PS [c h]

[a] N: New system [initial test, see section 5.2.1] M: change of moulding compound [supplementary test, see section 5.2.2]
E: Extension of the product range [supplementary test, see section 5.2.2] D: Change of design [supplementary test, see section 5.2.2]]
[b] The certification applies through to the largest dimension tested during initial testing testing. Furthermore, verification must be provided of creep tests conducted on 100 representative pipe samples for the entire production batch for the purposes of initial testing.
[c] Approval may be given after > 165 h; if creep failure occurs in < 165 h, three further samples are to be tested for > 1000 h. In the event of failure in < 1000 h, the products are to be rejected.
[d] testing is conducted on the weakest size (largest permissible SDR)
[e] only in applications involving drinking water
[g] The different designs (des.) can be found in ISO 17456
[h] If there are no negative results three times in a row, the monitoring frequency is set to once a year. If there are negative results, the monitoring frequency of the PG is restored.
[i] EG 133 / DN >200: 1x yearly one sample.

For the purposes of testing resistance to impact stress (impact bending test in conformity with ISO 179 / ISO 9854), either pipe sections or samples which are rod-shaped in an axial direction are taken in accordance with the information shown in Table J 7; the existing actual wall thickness applies. The rod-shaped samples are to be taken from pipe sections measuring (50 ± 1) mm or (120 ± 2) mm in length, distributed as evenly as possible over the circumference of the pipe. The sample width specified in Table J 7 corresponds to the chord length b of the circular section both of the outer and of the inner pipe wall.

The samples are not machined on the pipe surfaces if the wall thickness s ≤ 10.5 mm. In the case of samples taken from pipes with wall thicknesses in excess of 10.5 mm, the samples are machined from the outer surface to a sample height of (10 ± 0.5) mm. The machined surfaces are smoothed with fine abrasive paper (grain No. 220 or finer) in a longitudinal direction.

The impact bending test is performed on 10 samples in accordance with ISO 179 / ISO 9854 using a pendulum impact mechanism in conformity with DIN 51222-15, whereby the impact is exercised upon the outer surface of the pipe or upon the machined side. The test is performed at (0 ± 2) °C. It serves to determine whether the samples break. If more than 10% of the samples are broken during this testing procedure, the impact bending test is repeated on 20 new samples which have been taken from the same pipe. In this case, the breakage quota for the first and second tests is assessed together.

Table J 7 Test parameters for the impact bending test

Pipe		**Sample**			**Spacing between thrust-bearings**
Outside diam-eter d in mm	Wall thickness s in mm	Length in mm	Width in mm	Heigth in mm	in mm
< 25	≙ s	(100 ± 2) mm langer Rohrabschnitt			$70^{+0,5}_{0}$
≥ 25	≤ 4,2	50 ± 1	6 ± 0,2	≙ s	$70^{+0,5}_{0}$
> 25	> 4,2	120 ± 2	15 ± 0,5	max. 10,5	$70^{+0,5}_{0}$

For the purposes of testing impact stress resistance (stage process in accordance with DIN EN 1411), samples are tested in accordance with the information contained in Table J 8.

Table J 8 Test parameters for the impact stress test in the stage process

Diameter pipe in mm	**20**	**25**	**32**	**40**	**50**	**63**	**75**	**90**	**≥ 110**
Temperature in °C	0 °C								
Molt of falling weight in kg	**0,25**	**0,25**	**0,5**	**0,8**	**1**	**2,5**	**3,2**	**6,3**	**10**
Height of fall H50 in m	≥ 1 m								

J 13 Number of samples

The number of samples to be taken for the monitoring test is shown in Table J 9.

Table J 9 Minimum number of samples to be taken for the monitoring test (type test may require more samples)

Product group (see section 4.1)	Mechanical/physical examinations		Hygiene examinations Number of samples and length
	Number of samples	Length L per sample	
131 (Pipes ≤ 63 mm)	5 + 3 retained samples	1000 mm	d_e ≤ 32 mm: 15 x 1m 32 mm < d_e ≤ 50 mm: 6 x 1m 50 mm < d_e ≤ 110 mm: 4 x 1m 110 mm < d_e : 4 x 0,5m
132 (Pipes ≤ 160 mm)	5 + 3 retained samples	1000 mm	
133 (Pipes > 160 mm)	5 + 3 retained samples	1000 mm	
131.1 (Fittings ≤ 63 mm)	5 + 3 retained samples	-	d_e ≤ 32 mm: 40 pieces 32 mm < d_e ≤ 63 mm: 20 pieces 50 mm < d_e ≤ 110 mm: 10 pieces 110 mm < d_e : 4 pieces
132.1 (Fittings ≤ 160 mm)	5 + 3 retained samples	-	
133.1 (Fittings > 160 mm)	5 + 3 retained samples	-	

J 14 Consequences in the event of deviations

If the requirements are not met, the causes must be assessed and rectified, and the check must be repeated. As a rule, products which do not meet the specified requirements are to be rejected.

Annex K ZP 9.4.1 - Pressure pipes made from PP (Polypropylene)

(Edition: 17.03.2015)

K 1 Inspection and certification principles (also refer to section 2)

DIN 8077	Polypropylene (PP) pipes - PP-H, PP-B, PP-R, PP-RCT - Dimensions; DIN 8077:2008-09
DIN 8078	Polypropylene (PP) pipes - PP-H, PP-B, PP-R, PP-RCT - General quality requirements and testings; DIN 8078:2008-09
E DIN EN ISO 15494	Plastic piping systems for industrial applications – Polybutylene (PB), polyethylene (PE), and polypropylene (PP) – Specifications for pipeline components and the pipeline system (draft); German version prEN ISO 15494:2013-04
DIN EN 10204:2005-1	Metallic products - Types of inspection documents; German version EN 10204:2004

Table K 1 Quality enhancement

Requirements	Annex K ZP 9.12.1	DIN 8077	DIN 8077	DIN EN ISO 15495	Refer to:
Participation in the Plastic Pipe Association (KRV) recycling system	+	-	-	-	Section 1.2
Goods inward check	+	-	-	-	Annex K
Half-yearly external monitoring	+	-	-	-	Annex K
Strict requirements on the using of material	+	-	-	-	Annex K

K 2 General

Annex K (ZP 9.4.1) of this certification scheme applies to seamless pressure pipes made from polypropylene (PP), PP-H, PP-B, PP-R, PP-RCT, which contain all the requirements for the award of the "DINplus" quality mark and are used for the construction for industry pipes for transporting liquids and gases. The quality enhancement is summarized in Table K 1.

Pipes conforming to the CDW guidelines and marked with the application designation DW (i. e. drinking water quality) may be used as drinking water pipes.

Pressure pipes made from PP which are also approved by way of general technical approval for use in overground pressurised or depressurised pipelines from installations for the storage of liquids which are potentially hazardous to water must satisfy the supplementary details as well as the requirements of the general technical approval, in addition to the requirements set out under Annex K (ZP 9.4.1) of this certification scheme. Following submission of the certificate of conformity issued by the DIN CERTCO certification agency, the marking is to be applied accordingly.

K 3 Product groups

The product groups are shown in Table K 2. If all the requirements are met, certificates are issued for each product group and production facility.

Tabelle K 2 Product groups

Product group	Product type	Nominal diameter (DN/OD)
91	Pipe	d ≤ 160 mm
92		d ≥ 180 mm

K 4 Substance / materials used

Polypropylene (PP) is used as a material in according to DIN 8078 and DIN EN ISO 15494.

The verification of the long-term stability (internal pressure creep behaviour) must be recorded in accordance with the procedure defined in ISO/DIS 9080 or DIN 16887. The pipe manufacturer must ensure that the documents are submitted to DIN CERTCO by the respective raw material producer for each type of material.

As used material for pressure pipes may only types of materials, which are included in the material lists published by the Plastic Pipe Industry Association (KRV). The pipe manufacturer may only use approved types of materials for the relevant factory. Materials used for drinking water pipes must be also included in the KRV material lists for drinking water pipes.

New material is to be used for the production of pressure pipes. The use of recycled material of the same type that used in the pipe manufacturer's pressure pipe production is permissible. Return material, Reclaimed and recycled material may not be used.

K 5 Production

The process for the manufacture of pipes and fittings must ensure even and reproducible production conditions, as well as be documented in accordance with the factory regulations of the pipeline part manufacturer.

The correlation between the test batch and the date of manufacture must be established by factory records. The types of materials used must be entered in these records.

The extruder settings must be monitored; a record is to be kept of important parameters.

K 6 Dimensions

For the pipe dimensions are DIN 8077 and DIN EN ISO 15494 as well as the factory regulations applyed. The individual cases where the wall thickness s is exceeded may be +0.2 s at s ≤ 10 mm and +0.15 s at s > 10 mm. The average wall thickness must lie within the permissible limit dimensions. The wall thicknesses may not be below the permissible threshold.

K 7 Pipe connections and seals

The plastic pipes are connected together or to appropriate pipeline parts using butt welding or socket welding.

K 8 Delivery form, Packaging, Transport, Storage

The pipes are supplied in straight lengths.

K 9 Processing and laying guidelines

The pipe manufacturer is required to issue supplementary information about laying in the case of laying measures which go over and beyond the specifications of the DIN standards, DVGW worksheets and KRV laying instructions.

K 10 Minimum marking

All the pipes are to be marked continuously and permanently (embossing/laser) - at intervals of about 1 m - with the minimum information indicated in Table K 3.

Table K 3 Minimum marking of the pipes

Designation	Sample marking
Name and/or trademark of the manufacturer	xyz
Quality mark for plastic pipes with a register number	P1R0000
KRV trademark (if wanted)	[1]
Product standard	DIN 8077/78 / DIN EN ISO 15494
Material and designation	PP-H
Nominal diameter x Nominal wall thickness	110 x 8,1
Nominal pressure	PN 10
Intended use (if applicable)	TW
Manufacture‘s details (by name or encrypted) Machine number Production period/date Production centre (if there are more than one)	 8 21/11/2014 Berlin

[1] observing licensing rights

K 11 Material/goods inward check

The material tests (TT, BRT/PVT, AT) are grouped in Table K 4.

Table K 4 Material test (per moulding compound)

Property	Require-ments for	Requirement (Parameter)	Type test (TT) / Initial type testing (ITT)	Factory production control FPC (PVT)	Monitoring test (AT)
melt flow index	Annex K	0,28 - 1,1 g/10 min; Consistency of the deliveries (MFR 190°C/5 kg; DIN ISO 1133)		1x / Delivery / batch	
Density	Annex K	acc. to delivery agreement or approval of the moulding material (~0,91 g/cm³; DIN EN ISO 1183-1)		Factory certificate 2.2 (or 1x / Delivery / batch)	
Dry loss	Annex K	Heating cabinet/Infrared Meth.: <0,1 % Karl-Fischer-Methode: <0,03 %		Acceptance test certificate 3.1	
Homogenität	Annex K	Agglomerate/bubbles/etc < 0,02 mm²		Factory certificate 2.2	
Hygienic conformity [a]	KTW-guideline	Granule fulfilles KTW-guideline (Migration test; DIN EN 12873)		Factory certificate 2.2	
Odour and taste test [a]	KTW-guideline	Assessment factor 1: no impairment to odour / taste (comp. DIN EN 1420; DIN EN 1622)		Acceptance test certificate 3.1	
Microbiological testings [a]	DVGW W 270	fulfilles DVGW W 270		Factory certificate 2.2	

[a] Only to be performed if the pipes are to be used for drinking water applications and are marked accordingly.

K 12 Connector and Pipe system test

The pipe tests (TT, BRT/PVT, AT) are grouped in Table K 5.

The (external) checks should be carried out on the dimensions/types/groups which have not previously been selected for a monitoring test (AT).

The checks should be carried out on the largest production volume for each group.

Table K 5 Connector and Pipe system test

Property		Require-ment for	Requirement (Parameter)	Type test (TT) per moulding compound				Internal monitoring (BRT/PVT)	External monitoring (AT)
				Testing to be conducted at [a, b]				Factory production control [see 7.1] [c]	Monitoring test [see 5.2.3]
				N (ITT)	D	M	E		
Testing on pipes:									
Condition		Annex K DIN 8078 ISO 15494	smooth, clean, free from bub-bles/scores Ends of pipes: vertical, burr-free	1x / PG	X	X	X	1x / Extr. / DN / every 2 h	1x / half-year/ PG / PS
Colour		Annex K ISO 15494	Basic color Greyish RAL 7032; Others permissible	1x / PG	X	X	X	1x / Extr. / DN / every 2 h	1x / half-year / PG / PS
Dimensions		Annex K DIN 8077 ISO 15494	acc. to factory standard; dev. up to 0,2 s (s≤10 mm) bzw. 0,15 s (s>10 mm)	1x / PG	-	X	X	1x / Extr. / DN / every 2 h	1x / half-year / PG / PS
Heat treatment		Annex K DIN 8078 ISO 15494	No bubbles, cracks or delaminations (150/135 °C; e≤8 mm:60 min; e≤16 mm:120 min; ISO 2505)	1x / PG	-	X	X	1x / Extr. / DN / FM / week	1x / half-year / PG / PS
Longitudinal rever-sion		Annex K DIN 8078 ISO 15494	≤ 2 %; (200/100 mm; 150/135 °C;60/120 min; ISO 2505)	1x / PG	-	X	X	1x / Extr. / DN / FM / week and after every startup	1x / half-year / PG / PS
Melt flow index MFR		Annex K ISO 15494	Devi. Granulat ≤ 30 % (MFR 190°C/5kg od. 230°C/2,16kg; DIN ISO 1133)	1x / PG	-	X	X	1x / Extr. / DN / FM / week	1x / half-year / PG / PS
Impact resistance		Annex K DIN 8078 ISO 15494	TIR ≤ 10 % (10 Proben; 23°C/0°C; Im-pact bending test / Alternatively notched≥ 7 kJ/m²; ISO 179/ ISO 9854)	1x / PG	-	X	X	1x / Extr. / DN / FM / startup min. 1x / Extr. / DN / FM/ week	1x / half-year / PG / PS
Homogeneity		Annex K	Agglomerate/bubble/etc < 0,02 mm² and ≤ Grad 3 (ISO 13949)	1x / PG	-	X	X	min. 2x / production batch	1x / half-year / PG / PS
Re-sistance to internal pressure	20°C >1 h	Annex K ISO 15494 DIN 8078	>1 h (21/16/15 MPa; ISO 1167)	1x / FM / PG	-	X	-	1x / Extr. / DN / FM / week and after every startup (min. 1 sample; >1h or >165h)	1x / half-year / PG / PS (3 samples; >1h or >165h)
	95°C >165 h	Annex K DIN 8078	>165 h (4,2/4/3,8/3,0 MPa; ISO 1167)	-	-	-	-		
	95°C >1000h	Annex K ISO 15494; DIN 8078	>1000 h (3,8/3,5/2,6 MPa; ISO 1167)	1x / FM / PG	-	X	-	-	1x / half-year / PG / PS (3 samples)
	95°C >3000h	Annex K	>3000 h (acc. to LCL curve; ISO 1167)	1x / FM	-	X	-	-	-

Property	Require-ment for	Requirement (Parameter)	Type test (TT) per moulding compound				Internal monitoring (BRT/PVT)	External monitoring (AT)
			Testing to be conducted at [a, b]				Factory production control [see 7.1] [c]	Monitoring test [see 5.2.3]
			N (ITT)	D	M	E		
hygienic conformity [d]	KTW guide-line	Materials fulfill KTW guideline	1x / FM	-	X	-	-	1x / year / FM
Designation	Annex K	see Table L 3	-	-	-	-	1x / Extr. / DN / startup min. 1x / Extr. / DN / day	1x / half-year/ PG / PS
Tests of the suitability for use on the pipe system:								
joint test Welding connection	Annex K ISO 15494	t > 1 h; Creep test on welded connection (20°C; s.a.; ISO 1167)	1x / PG	-	X	-	1x / PG / year	1x / half-year / PG / PS
	Annex K ISO 15494	t > 1000 h; Creep test on welded con-nection (95°C; s.a.; ISO 1167)	1x / PG	-	X	-	1x / PG / year	1x / half-year / PG / PS
joint test mech. connection	Annex K ISO 15494	t > 1 h; Creep test on mech.Connec-tion (20 °C; 10,8/7,6/7,5 MPa; ISO 1167)	1x / PG	-	X	-	1x / PG / year	1x / half-year / PG / PS
	Annex K ISO 15494	t > 1000 h; Creep test on mech.Con-nection (95 °C; 1,85/1,6/1,45 MPa; ISO 1167)	1x / PG	-	X	-	1x / PG / year	1x / half-year / PG / PS

[a] N: New system [initial test, see section 5.2.1] M: Change of moulding compound [supplementary test, see section 5.2.2]
E: Extension of the product range [supplementary test, see section 5.2.2] D: Change of design [supplementary test, see section 5.2.2]
[b] The certification applies through to the largest dimension tested during initial testing/supplementary testing. Furthermore, verification must be provided of creep tests conducted on 100 representative pipe samples for the entire production batch for the purposes of initial testing.
[c] The tests to be conducted within the scope of the external monitoring test are to be acknowledged the purposes of self-monitoring.
[d] only in applications involving drinking water

The following applies for testing homogeneity:
At least one microtome section is to be taken across the axis of the pipe, measuring approximately 10 - 20 µm in thickness, from three samples (pipe sections) from a production batch. Magnified by 75x to 100x, the microtome sections are examined for the size and nature of possible defects, whereby the total area may not be any less than 100 mm². Alternatively, pressed samples can be used.

K 13 Number of samples

The number of samples to be taken for the monitoring test is shown in Table K 6.

Table K 6 Minimum number of samples to be taken for the monitoring test (type test may require several samples)

Product group (see section 4.1)	Mechanical/physical examinations		Hygiene examinations Number of samples and length
	Number of samples	Length L per sample	
91 (≤ 160 mm)	10 + 3 retained samples	1000 mm	$d_e \leq 32$ mm: 15 x 1m 32 mm < $d_e \leq 50$ mm: 6 x 1m 50 mm < $d_e \leq 110$ mm: 4 x 1m 110 mm < d_e : 4 x 0,5m
92 (≥ 180 mm)	10 + 3 retained samples		

K 14 Consequence in the event of deviations

If the requirements are not met, the causes must be assessed and rectified, and the check must be repeated. As a rule, products which do not meet the specified requirements are to be rejected.

Annex L ZP 10.2.1-8 – Pressure pipes and fittings made from chlorinated polyvinyl chloride (PVC-C)

(Edition: 17.03.2015)

L 1 Inspection and certification principles (also refer to section 2)

DIN 8079	Chlorinated polyvinyl chloride (PVC-C) pipes - Dimensions; DIN 8079:2009-10
DIN 8080	Chlorinated polyvinyl chloride (PVC-C) pipes - General quality requirements and testings; DIN 8080:2009-10
DIN 8080 Beiblatt 1	Chlorinated polyvinyl chloride (PVC-C) pipes, PVC-C 250 - General quality requirements and testings; Chemische Widerstandsfähigkeit: DIN 8080 supplementary sheet 1:2000-08
DIN EN ISO 15493	Plastic piping systems for industrial applications - Acrylnitrile-Butadiene-styrene (ABS), unplasticized poly (vinyl chloride) (PVC-U) and chlorinated poly (vinyl chloride) (PVC-C) - Specifications for components and the system; Metric series (ISO 15493:2003); German version EN ISO 15493:2003-10
DVGW W 544	Plastics pipe for drinking water installation; Working sheet W 544:2004-05
DVGW W 534	Pipe connector and pipe connectors in the drinking water installation; Working sheet W 544:2007-05
DIN EN 10204:2005-1	Metallic products, Types of inspection documents, German version EN 10204:2004

L 2 General

Annex L (ZP 10.2.1-8) of this certification scheme applies to pressure types and to fittings which are produced by injection moulding made from chlorinated polyvinyl chloride (PVC-C), which are marked with the "DIN*plus"* quality mark from DIN CERTCO. The quality enhancement is summarised in Table L 1.

Type of use:

- Drinking water installation systems: The systems are used in the drinking water installation in conformity with DIN 1988. Only pipes and fittings of SDR 9 for 70 °C/10 bar, conforming to DVGW worksheets W 544 and W 534, may be used.

They form part of drinking water installation systems comprising the following structural elements:

- Pipes with smooth ends in conformity with DIN 8079
- Fittings produced by injection moulding

- Fittings made from pipes
- Seals in conformity with EN 681
- Adhesive substances in accordance with DVS guidelines 2204-5

All parts of the pipes, pipe connectors and joints which come into contact with the drinking water when used as intended are commodities within the meaning of the Foodstuffs, Commodities and Feed Code (Foodstuffs and Feed Code – LFGB). Plastics and sealing materials, which come into contact with the drinking water when used as intended, must conform to the relevant CDW guidelines published by the Federal Environmental Protection Agency.

- Pipelines for further applications:

Furthermore, pipes in conformity with DIN 8079 / DIN EN ISO 15493 and fittings in conformity with DIN EN ISO 15493 from other SDR series, which satisfy the quality requirements of this certification scheme, will also be marked with the DIN CERTCO quality mark for plastic pipes.

Pipes and fittings may be used for the purposes of drinking water pipes provided they satisfy CDW recommendations and are marked with the application designation TW (denoting drinking water quality).

- general technical approval:

Pressure pipes and fittings made from PVC-C conforming to Annex L (ZP 10.2.1-8) of this certification scheme which are also approved by way of general technical approval for use in overground pressurised or depressurised pipelines from installations for the storage of liquids which are potentially hazardous to water must satisfy the supplementary details as well as the requirements of the general technical approval, in addition to the requirements set out under Annex L (ZP 10.2.1-8) of this certification scheme. Following submission of the certificate of conformity issued by the DIN CERTCO certification agency, the marking is to be applied accordingly.

Table L 1 Quality enhancement

Requirements	**Annex L ZP 10.2.1-8**	DIN 8079	DIN 8080	DIN EN ISO 15493	**Refer to:**
Participation in the Plastic Pipe Association (KRV) re-cycling system	**+**	-	-	-	Section 1.2
goods inward check	**+**	-	-	-	Annex L
Half-yearly external monitoring	**+**	-	-	-	Annex L
Strict requirements on the using of material	**+**	-	-	-	Annex L

L 3 Product groups

The product groups are shown in Table L 2. If all the requirements are met, certificates are issued for each product group and production facility.

Table L 2 Product groups

Product group	**Product type**	**Nominal diameter (DN/OD)**
101	Pipe	d ≤ 63 mm
102		63 mm < d ≤ 225 mm
103		225 mm < d
101.1	Fitting	d ≤ 63 mm
102.1		63 mm < d ≤ 225 mm
103.1		225 mm < d

L 4 Substances / materials used

The used material is PVC-C according to DIN 8079 respectively DIN EN ISO 15493.

The verification of the long-term stability (internal pressure creep behaviour) must be recorded in accordance with the procedure defined in ISO/DIS 9080 or DIN 16887. The internal pressure creep curves determined in this way may not be below the reference characteristics (minimum curves) specified in DIN 8078 or 16832-2 at any point. At 20 °C and 50 years, the LCL values for the pipe material must be ≥ 25 N/mm^2 (MRS 250), and the LCL values for the fittings material must be ≥ 20 N/mm^2 (MRS 200).

The pipe/fittings manufacturer must ensure that verification of long-term stability for the material used is submitted to DIN CERTCO.

The pipe/fittings manufacturer may only use materials for which it has successfully completed approval testing in accordance with this certification scheme through DIN CERTCO.

The composition of the material must conform to prevailing white lists. New material must be used for the manufacture of pipes and fittings. The use of work-in-progress material for the respective processing from the same compound of the pipe and fittings manufacture´s is permissible.

Returned, reconditioned and recycled material may not be used.

L 5 Production

The process for the manufacture of pipes and fittings must ensure even and reproducible production conditions, as well as be documented in accordance with the factory regulations of the pipeline part manufacturer.

The correlation between the test batch and the date of manufacture must be established by factory records. The types of materials used must be entered in these records.

The extruder settings must be monitored; a record is to be kept of important parameters.

L 6 Dimensions

For the dimensions of the pipes applies DIN 8079 respectivaley DIN EN ISO 15493. For the function dimensions of fittings are DIN EN ISO 15493 and the respective factory standard applyed.

L 7 Pipes connections and seals

The plastic pipes are connected together or to appropriate pipeline parts through cementing (DVS 2204 part 1), high-speed hot-gas welding (after special training) or butt welding (pipes and plates).

L 8 Delivery form, Packaging, Transport, Storage

The pipes are supplied with smooth ends, and the fittings are supplied with conical or cylindrical couplings.

L 9 Processing and laying guidelines

The pipe manufacturer is required to issue supplementary information about laying in the case of laying measures which go over and beyond the specifications of the DIN standards, DVGW worksheets and KRV laying instructions.

L 10 Minimum marking

All the pipes are to be marked continuously and permanently - at intervals of about 1 m - with the minimum information indicated in Table L 3.

All connectors are tob e marked readable and permanently with the minimum information indicated in Table L 4.

Table L 3 Minimum marking of the pipes

Designation	Sample marking
Name and/or trademark of the manufacturer	xyz
Quality mark for plastic pipes with a register number	P1R0000
KRV trademark (if needed)	[1]
Product standard	DIN 8079/80 / DIN EN ISO 15493
Material and designation	PVC-C
Nominal diameter x Nominal wall thickness	20 x 2,3
Nominal pressure	PN 10
Intended use (if applicable)	TW
Manufacturer's details (by name or encrypted) Machine number Production period Production centre (if there are more than one)	 8 21/11/2014 Berlin

[1] observing licensing rights

Table L 4 Minimum marking of the fittings

Designation	Sample marking
Name and/or trademark of the manufacturer [2]	xyz
Quality mark for plastic pipes with a register number	P1R0000
KRV trademark (if needed)	[1]
Product standard [2]	DIN 8079/80 / DIN EN ISO 15493
Material and designation	PVC-C
Nominal diameter x Nominal wall thickness	63 - 32 - 63
Nominal wall thickness or nominal pressure or pipe series /SDR	5,8 / PN 10 / S10 / SDR 21
Intended use (if applicable)	TW
Manufacturer's details (by name or encrypted) Machine number Production period Production centre (if there are more than one)	 8 11/2014 Berlin

[1] observing licensing rights
[2] These details are either to be marked on the fitting or on a plate (on the fitting or packaging).

L 11 Material/goods inward check

The material tests (TT, BRT/PVT, AT) are grouped in Table L 5.

Tabelle L 5 Material test (per moulding compound)

Property		Require-ments for	Requirement (Parameter)	Type test (TT) Initial type testing (ITT)	Factory production control (PVT)	Monitoring test (AT)
K-value		Annex L	≥ 60 (DIN EN ISO 1628-2)	-	X	-
Hygienic conformity [a]		KTW guide-line	Granulate corresponds to the KTW-Guideline (Migration test; DIN EN 12873)	-	Factory certificate 2.2	-
Odour and taste test on the granulate [a]		KTW guide-line	Assessment factor 1: no impairment to odour / taste (comp. to DIN EN 1420; DIN EN 1622)	-	Acceptance test certificate 3.1	-
Microbiological testings [a]		DVGW W 270	fulfilles DVGW W 270	-	Factory certificate 2.2	-
E-Modules (pull)		Annex L	≥ 1900 N/mm²	-	Factory certificate 2.2	-
Resin powder (PVC-C)	Chlorine content	Annex L	≥ 60 % (DIN 53474)	-	Factory certificate 2.2	-
	Sieve residue	Annex L	>250µm: max. 12 %; >63µm: max. 5 % (DIN EN ISO 4610 / DIN 53477 / Fac-tory regulation)	-	1x / Delivery / batch resp. Factory certificate 2.2	-
	Bulk density	Annex L	740 - 840 g/l (DIN EN ISO 60)	-	1x / Delivery / batch resp. Factory certificate 2.2	-
	Volatile constituents	Annex L	< 0,2 % (ISO 1269)	-	1x / Delivery / batch resp. Factory certificate 2.2	-
	Thermal stability	Annex L	acc. to factory regulation (DIN 53381-1)	-	1x / Delivery / batch resp. Factory certificate 2.2	-
Additives		Annex L	acc. to factory regulation	-	1x / Delivery / batch resp. Factory certificate 2.2	-
Dryblend	Sieve residue	Annex L	>250µm:max. 12 %; >63µm:max. 5 % (DIN EN ISO 4610 / DIN 53477 / Factory regulation)	-	1x / Delivery / batch resp. Factory certificate 2.2	-
	Bulk density	Annex L	740 - 840 g/l (DIN EN ISO 60)	-	1x / Delivery / batch resp. Factory certificate 2.2	-
	Volatile constituents	Annex L	< 0,2 %	-	1x / Delivery / batch resp. Factory certificate 2.2	-
	Thermal stability	Annex L	acc. to factory regulation (DIN 53381-1)	-	1x / Delivery / batch resp. Factory certificate 2.2	-
	Vicat-softening temperature	Annex L	VST ≥ 110°C (DIN 8080 / (DIN EN ISO 306)	-	Factory certificate 2.2 and acc. to factory regulation	-
Granule	Volatile constituents	Annex L	< 0,2 %	-	1x / Delivery / batch resp. factory certificate 2.2	-
	Thermal stability	Annex L	in acc. with factory regulation (DIN 53381-1)	-	1x / Delivery / batch resp. Factory certificate 2.2	-
	Vicat-softening temperature	Annex L	VST ≥ 110°C (DIN 8080 / (DIN EN ISO 306)	-	Factory certificate 2.2 resp. acc. to factory regulation	-

[a] Only to be performed if the pipes are to be used for drinking water applications and are marked accordingly.

L 12 Connector- and pipe system test

The pipe/connector and pipe system tests (TT, BRT/PVT, AT) are grouped in Table L 6.

The (external) checks should be carried out on the dimensions/types/groups which have not previously been selected for a monitoring test (AT).

The checks should be carried out on the largest production volume for each group.

Table L 6 Pipe-, Connector- and pipe system test

Property		Require-ment for	Requirement (Parameter)	Type test (TT) per moulding compound				Internal monitoring (BRT/PVT)	External monitoring (AT)
				Testing to be conducted at [a, b]				Factory production control [see 7.1] [c]	Monitoring test [see 5.2.3]
				N (ITT)	D	M	E		
Testing on pipes:									
Condition		Annex L	smooth, clean, free from bub-bles/scores Ends of pipes: vertical, burr-free	1x / PG	X	X	X	1x / Extr. / DN / every 8 h (2h)	1x / half-year/ PG / PS
Colour		Annex L	Basic Colour Greyish RAL 7032; others permissible	1x / PG	X	X	X	1x / Extr. / DN / every 8 h (2h)	1x / half-year / PG / PS
Dimensions		Annex L	acc. to factory standard (DIN EN ISO 15493)	1x / PG	X	X	X	1x / Extr. / DN / every 8 h (2h)	1x / half-year / PG / PS
Designation		Annex L	see Table L 3	-	-	-	-	1x / Extr. / DN / startup min. 1x / Extr. / DN / day	1x / half-year / PG / PS
Change after heat treatment		Annex L	No bubbles, cracks or delaminations (150 °C; 120min [e≤4 mm:30 min; e≤16 mm:60 min]; ISO 2505)	1x / PG	X	X	X	1x / Extr. / DN / startup min. 1x / Extr. / DN / day	1x / half-year / PG / PS
Longitudinal rever-sion		Annex L	≤ 5 %; (200/100 mm; 150 °C; s.o.; ISO 2505)	1x / PG	X	X	X	1x / Extr. / DN / startup min. 1x / Extr. / DN / day	1x / half-year / PG / PS
Vicat-Softening temperature		Annex L	VST/B/50 ≥ 110 °C (DIN EN ISO 306)	1x / PG	-	X	-	1x / Extr. / DN / FM / startup min. 1x / Extr. / DN / week or acc. to factory regulation	1x / half-year / PG / PS
Creep in-ternal pressure behaviour	20°C >1 h	Annex L	>1 h (43 MPa; ISO 15493, ISO 1167)	-	-	-	-	(X)	-
	95°C >165 h	Annex L	>165 h (5,7 MPa; ISO 15493, ISO 1167)	1x / FM / DN	-	X	-	1x / Extr. / DN / FM / startup min. 1x / Extr. / DN / week	1x / half-year/ PG / PS (3 samples)
	95°C >1000h	Annex L	>1000 h (4,6 MPa; ISO 15493, ISO 1167)	1x / FM / DN	-	X	-	-	1x / half-year/ PG / PS (3 samples)
	95°C >8760h	Annex L	>8760 h (3,6 MPa; ISO 15493, ISO 1167)	1x / FM	-	-	-	-	-

Property	Require-ment for	Requirement (Parameter)	Type test (TT) per moulding compound				Internal monitoring (BRT/PVT)	External monitoring (AT)
			Testing to be conducted at [a, b]				Factory production control [see 7.1] [c]	Monitoring test [see 5.2.3]
			N (ITT)	D	M	E		
Impact resistance (Falling weight)[e]	Annex L	TIR ≤ 10 % (scope procedure; 0 °C; ISO 3127 / DIN EN 744)	1x / FM / PG	-	X	-	1x / Extr. / DN / FM / startup min. 1x / Extr. / DN / week	1x / half-year/ PG / PS
Impact bending test [e]	Annex L	TIR ≤ 10 % (10 samples; 23 °C; Impact bending test ISO 179/ ISO 9854)	1x / FM / PG	-	X	-	1x / Extr. / DN / FM / startup min. 1x / Extr. / DN / day	
Proof building class (if required)	Annex L	Designation (B1 od. 2; DIN 4102-1)	1x / DN	-	X	-	-	1x / year / PS
Hygiene	Annex L	KTW guideline	1x / PG	-	X	-	-	1x / year / PS
Testings on fittings:								
Condition	Annex L	smooth, clean, free from bub-bles/scores Ends of pipes: vertical, burr-free	1x / PG	X	X	X	1x / Extr. / DN / every 8 h	1x / half-year / PG / PS
Colour	Annex L	Basic colour greyish RAL 7032; others permissible	1x / PG	X	X	X	1x / Extr. / DN / every 8 h	1x / half-year / PG / PS
Dimensions	Annex L	acc. to factory standard (DIN EN ISO 15493)	1x / PG	X	X	X	1x / Extr. / DN / every 8 h	1x / half-year / PG / PS
Designation	Annex L	see Table L 4	-	-	-	-	1x / Extr. / DN / startup min. 1x / Extr. / DN / day	1x / half-year / PG / PS
Longitudinal heat reversion	Annex L	No bubbles, cracks or delaminations (150 °C; e≤3 mm:15 min; e≤10 mm:30 min; e>10 mm:60 min ISO 580)	1x / PG	X	X	X	1x / Extr. / DN / startup min. 1x / Extr. / DN / day	1x / half-year / PG / PS
Vicat-Softening temperature	Annex L	VST/B/50 ≥ 103 °C (DIN EN ISO 306 / ISO 2507-1)	1x / PG	-	X	-	1x / Extr. / DN / FM / startup min. 1x / Extr. / DN / week or. acc. to factory regulation	1x / half-year / PG / PS
Creep in-ternal pressure strength 20°C >1000h	Annex L	>1 h (25,8 MPa; ISO 15493, ISO 1167)	-	-	-	-	-	-
Creep in-ternal pressure strength 60°C >1h	Annex L	>165 h (21,1 MPa; ISO 15493, ISO 1167)	-	-	-	-	-	-
Creep in-ternal pressure strength 80°C >1000h	Annex L	>1000 h (6,9 MPa; ISO 15493, ISO 1167)	1x / FM / PG	-	X	-	1x / PG / month	1x / half-year/ PG / PS (3 samples)
Hygiene	Annex L	KTW guideline	1x / PG	-	X	-	-	1x / year / PS

Property		Require-ment for	Requirement (Parameter)	Type test (TT) per moulding compound				Internal monitoring (BRT/PVT)	External monitoring (AT)
				Testing to be conducted at [a, b]				Factory production control [see 7.1] [c]	Monitoring test [see 5.2.3]
				N (ITT)	D	M	E		
Tests of suitability for use on the piping system:									
Joint test		Annex L	t > 1000 h; Creep test on welded connection (20 °C; 17 MPa; ISO 1167)	1x / PG	-	X	-	1x / on 3 DN / year (3 samples)	1x / year/ PG / PS (3 samples)
		Annex L	t > 1000 h; Creep test on welded connection (80 °C; 4,8 MPa; ISO 1167)	1x / PG	-	X	-		
		Annex L	t > 1000 h; Creep test on welded connection (95 °C; 4,6 MPa; ISO 1167)	1x / PG	-	X	-		
Resistance to thermal cycling		Annex L	See below	1x / FM	-	X	-	-	-
Resistance to shearing		Annex L	See below	1x / FM	-	X	-	-	1x / year / PS
Joint test (mech. conect.)	Under-pressure	Annex L	See below	1x / FM	-	X	-	-	-
	Pressure surge	Annex L	See below	1x / FM	-	X	-	-	-
	Thermal cycling	Annex L	See below	1x / FM	-	X	-	-	-
	Internal pressure	Annex L	See below	1x / FM	-	X	-	-	-
	Pull-out	Annex L	See below	1x / FM	-	X	-	-	-

[a] N: New system [initial test, see section 5.2.1] M: Change of moulding compound [supplementary test, see section 5.2.2]
E: Extension of the product range [supplementary test, see section 5.2.2] D: Change of design [supplementary test, see section 5.2.2][b]
The certification applies through to the largest dimension tested during initial testing/supplementary testing. Furthermore, verification must be provided of creep tests conducted on 100 representative pipe samples for the entire production batch for the purposes of initial testing.
[c] The tests to be conducted within the scope of the external monitoring test are to be acknowledged the purposes of self-monitoring.
[d] only in applications involving drinking water
[e] Verification is to be provided of either the falling weight test (impact strength) or of the impact bending test.

L 13 Number of samples

The number of samples to be taken for the monitoring test is shown in Table L 7.

Table L 7 Minimum number of samples to be taken for the monitoring test (type test may require more samples)

Product group (see section 4.1)	Mechanical/physical examinations		Hygiene examinations number of samples and length
	Number of samples	Length L per sample	
101 (d ≤ 63 mm)	10 + 3 retained samples	1000 mm	d_e ≤ 32 mm: 15 x 1m 32 mm < d_e ≤ 50 mm: 6 x 1m 50 mm < d_e ≤ 110 mm: 4 x 1m 110 mm < d_e : 4 x 0,5m
102 (63 mm < d ≤ 225 mm)	10 + 3 retained samples		
103 (225 mm < d)	10 + 3 retained samples		
101.1 (d ≤ 63 mm)	10 + 3 retained samples	-	d_e ≤ 32 mm: 40 pieces 32 mm < d_e ≤ 63 mm: 20 pieces 50 mm < d_e ≤ 110 mm: 10 pieces 110 mm < d_e : 4 pieces
102.1 (63 mm < d ≤ 225 mm)	10 + 3 retained samples		
103.1 (225 mm < d)	10 + 3 retained samples		

L 14 Tests and Consequences in the event of deviations

If the requirements are not met, the causes must be assessed and rectified, and the check must be repeated. As a rule, products which do not meet the specified requirements are to be rejected.

Strength properties during the internal pressure creep test:
Pipes: The pipes must achieve a minimum operating time of t = 1000 h; σ_o = 4.6 N/mm2; ϑ = 95 °C.
Within the scope of factory production control, testing is conducted under conditions of σ_o = 5.6 N/mm^2; ϑ = 95 °C.The pipes can be approved following an operating time of t ≥ 165 h. If they fail within a time of t < 165 h, two further pipe samples (subsequent samples from the same production batch) must be tested under conditions of σ = 4.6 N/mm^2; ϑ = 95 °C. Failure may not occur in fewer than 1000 h. If a creep failure occurs in any of the subsequent samples before t = 1000 h, the production batch affected must be rejected until the test is next passed.

Fittings: The fittings are testet with bonded pipes and taking into account the connection type and must reach a minimum service live of t = 1000 h; σ_o = 6,8 N/mm^2; ϑ = 80 °C. The test pressure is calculated e.g. for SDR 9 according to the equation:

$$p_{e,p} = \frac{20 \cdot \sigma_o}{SDR - 1} = \frac{20 \cdot 6{,}8}{9 - 1} = 17{,}0 \text{ bar}$$

$p_{e,p}$ Testing pressure [bar]
σ_o Test stress [N/mm^2]
SDR Diameter/wall thickness [-]

The fittings may not break during the defined test period. The test must be repeated if pipes break or there are leaks from connections. In the case of fittings with a change in direction (for instance, T-pieces, bows), the length of the pipe which is stuck in may not be any greater than L + d + L_5 after the change in direction. To enable the cementing to cure, the stuck pipe connections must be left to store for 20 days at room temperature and then for at least four days at 80 °C. If an operating time of t ≥ 1000 h is not achieved, testing is to be repeated on fittings of the same type and dimensions with twice the number of samples. No failures may be discovered. If the creep failure occurs in any of the subsequent samples prior to 1000 hours, the cause of the premature failure must be rectified, and the test frequency for the fittings affected must be increased to 3 tests per month for at least half a year.

Impact bending test:
Samples are taken from pipes in a longitudinal direction. The samples are taken from the same section of pipe by machining, distributed as evenly as possible over the circumference of the pipe. They are not machined on the surface. The impact bending test is performed on 10 samples in accordance with ISO 179 / ISO 9854, albeit with the test parameters specified in Table L 8, whereby the impact is exercised upon the outer surface of the sample. Testing is conducted at 23°C.

Table L 8 Testing parameters for the Impact bending test

Pipe		**Sample**				
Outer diameter d [mm]	Wall thickness s [mm]	Length [mm]	Width [mm]	Height [mm]	Pendulum impact mechanism energy [J]	Spacing between thrust bearings [mm]
< 25	≙ s	(100 ± 2) mm long pipe section			15	$70^{+0,5}_{0}$
≥ 25	≤ 9,5	50 ± 1	6 ± 0,2	entspr. der un-	15	$40^{+0,5}_{0}$
> 25	> 9,5	120 ± 2	15 ± 0,5	edited wall thickness s	50	$70^{+0,5}_{0}$

Annex M ZP 1.1.1 TW - Pressure pipes and fittings made from PVC-U (unplasticized Polyvinyl chloride) for drinking water

(Edition: 17.03.2015)

M 1 Inspection and certification principles (also refer to section 2)

DIN 8061	Unplasticized Polyvinyl chlorid (PVC-U) pipes - General quality requirements and testings; DIN 8061:2009-10
DIN 8062	Unplasticized Polyvinyl chlorid (PVC-U) pipes - Dimensions; DIN 8062:2009-10
DIN EN ISO 1452-1	Plastics piping systems for water supply and for buried and above-ground drainage and sewerage under pressure- Unplasticized poly (vinyl chloride) (PVC-U) - Part 1: General (ISO 1452-1:2009); German version EN ISO 1452-1:2009-04
DIN EN ISO 1452-2	Plastics piping systems for water supply and for buried and above-ground drainage and sewerage under pressure- Unplasticized poly (vinyl chloride) (PVC-U) - Part 2: Pipes (ISO 1452-2:2009); German version EN ISO 1452-2:2009-04
DIN EN ISO 1452-3	Plastics piping systems for water supply and for buried and above-ground drainage and sewerage under pressure- Unplasticized poly (vinyl chloride) (PVC-U) - Part 3: Fittings (ISO 1452-3:2009); German version EN ISO 1452-3:2009-04
DIN EN ISO 1452-4	Plastics piping systems for water supply and for buried and above-ground drainage and sewerage under pressure- Unplasticized poly (vinyl chloride) (PVC-U) - Part 4: Valves (ISO 1452-4:2009); German version EN ISO 1452-4:2009-04
DIN EN ISO 1452-5	Plastics piping systems for water supply and for buried and above-ground drainage and sewerage under pressure- Unplasticized poly (vinyl chloride) (PVC-U) - Part 5: Fitness for purpose of the system (ISO 1452-5:2009); German version EN ISO 1452-5:2009-04
DIN CEN/TS 1452-7	Plastics piping systems for water supply and for buried and above-ground drainage and sewerage under pressure- Unplasticized poly (vinyl chloride) (PVC-U) - Part 7: Guidance for the assessment of conformity; German version CEN/TS 1452-7:2014-05 (DIN SPEC 19675:2014-05)
DVGW GW 335-A1	Plastics piping systems for gas and water distribution – Requirements and testings - Part A 1: Pipes and machined fittings made from PVC-U for water distribution; DVGW GW 335-A1:2003-06
DIN EN 10204:2005-1	Metallic products - Types of inspection documents; German EN 10204:2004

M 2 General

Annex M (ZP 1.1.1 TW) of this certification scheme applies to pressure pipes and fittings made of unplasticized Polyvinylchlorid (PVC-U), which are marked with the "DIN*plus"* quality mark for plastics piping from DIN CERTCO. The quality enhancement is summarized in Table M 1.

Table M 1 Quality enhancement

Requirements	**Annex M ZP 1.1.1 TW**	DIN 8061	DIN 8062	DIN EN ISO 1452-1	DIN EN ISO 1452-2	**Refer to:**
Participation in the Plastic Pipe Association (KRV) re-cycling system	**+**	-	-	-	-	Section 1.2
Goods inward check	**+**	-	-	-	-	Annex M
Half-yearly external monitoring	**+**	-	-	-	-	Annex M
Strict requirements on the using of material	**+**	-	-	-	-	Annex M

The piping systems are used for water supply and for buried and above-ground drainage and sewerage under pressure.

Pipeline systems may be used for the purposes of drinking water, if they provided the CDW guidelines and are marked with the application designation TW (drinking water quality).

Usage category:

Pressure pipelines for drinking water: According to DIN 8061/8062, DIN EN 1452-2/-3/-4 and DVGW-working sheet GW 335-Part A1

Pressure pipelines for sewerage: Pipes be used according to DIN 8061/8062, SDR 34,4, SDR 21 and SDR 13,6 as well as DIN EN 1452-1.

Pressure pipes made from PVC-U in accordance with Annex M (ZP 1.1.1 TW) of this certification scheme which are also approved by way of general technical approval for use in overground pressurised or depressurised pipelines from installations for the storage of liquids which are potentially hazardous to water must satisfy the supplementary details as well as the requirements of the general technical approval, in addition to the requirements set out under Annexe M (ZP 1.1.1 TW) of this certification scheme. Following submission of the certificate of conformity issued by the DIN CERTCO certification agency, the marking is to be applied accordingly.

Annex M (ZP 1.1.1 TW) also applies to fittings, which are produced by injection moulding for the connection of pressure pipelines by cementing. They include fittings which are connected exclusively by bonding or by one side bonding. The further forms of connection involved are threaded or flanged connections.

M 3 Product groups

The product groups (based upon DIN CEN/TS 1452-7) are shown in Table M 2. If all the requirements are met, certificates are issued for each product group and production facility.

Furthermore, fittings are assigned to the following fittings groups (FSG): (1) bows; (2) brackets/T-pieces; (3) other fittings (socket, caps, etc.); (4) Valves.

Table M 2 Product groups

Product group	Product type	Nominal diameter (DN/OD)
111	Pipes	d ≤ 63 mm
112		75 ≤ d ≤ 225 mm
113		250 ≤ d ≤ 630 mm
114		710 ≤ d ≤ 1000 mm
111.1	Fittings	d ≤ 63 mm
112.1		75 ≤ d ≤ 225 mm
113.1		250 ≤ d ≤ 630 mm
114.1		710 ≤ d ≤ 1000 mm

M 4 Substance / materials used

The used material for the pipes and fittings is PVC-U according to DIN 8061 resp. DIN EN ISO 1452-1. The K-value according to DIN EN ISO 13229 for the pipes has to be 65 at least and should not exceed the value 70. The K-value for fittings has to be 58 at least.

The verification of long-term stability (internal pressure creep behaviour) must be performed in accordance with the processes defined in DIN EN ISO 9080 or DIN 16887 for ≥ 100 years for each type of stabiliser used in the stabiliser system (see Table M 3). The internal pressure creep curves determined in this way may not be below the reference characteristics (minimum curves) specified in DIN 8061 at any point. An LCL value ≥ 25 N/mm^2 (MRS 250) must be achieved at 20 °C and 50 years.

The pipe manufacturer must ensure that the verification of long-term stability is provided for all the types of stabiliser used by it and is submitted to DIN CERTCO. The verification of long-term stability does not have to be provided anew for pipe recipes for which there has been long-term experience between the certification agency (DIN CERTCO) and the pipe manufacturers.

The verification of long-term stability in accordance with DIN EN ISO 9080 is deemed to have been provided for the types of stabilisers which are tested and positively assessed within the scope of the GKR test programme 2000.

The long-term stability (internal pressure creep behaviour) is verified by the pipe manufacturer in accordance with Table M 4 for sets of five pipe samples or fittings of any size from the same production batch per test stress.

Table M 3 Testing for internal pressure for the authorization from Stabiliser types

Testing temperature ϑ [°C]	Testing stress σ [N/mm²]	Testing periode t [h]	
20	42	≥ 1	untill break max. 100
	35	≥ 100	untill break max. 2000
	32	≥ 1000	untill break max. 3000
60	17	≥ 1	untill break max. 100
	15	≥ 100	untill break max. 2000
	10	≥ 1000	untill break max. 3000

By the application of drinking water supply, the stabiliser and pipe recipe must conform to prevailing white lists. The guideline Values of the basic and supplementary requirements for hygienic compliance in accordance with CDW guidelines (guidelines laid down by the Federal Environmental Protection Agency (UBA) for the hygienic assessment of organic materials in contact with drinking water) must be complied with.

New material must be used for the production of the pressure pipes. The use of recycled material of the same type as that used in the pipe manufacturer's pressure pipe production is permissible.

Returned, reconditioned and recycled material may not be used.

The pipe manufacturer must conduct an approval test in each production centre on a set of dimensions for each change in pipe recipe over and beyond the limit deviations set out in Table M 4; scope in accordance with the monitoring test.

Table M 4 Pipe recipe limiting deviations

Components	Art	Range X resp. limiting deviations
PVC-resin 100 components	K-value	$X_1 : \pm 2$
Stabilisation system on the basis of:	1) Pb or 2) CaZn or 3) Sn or 4) OB or 5) others	$X_2: \pm 40\ \%$
Total amount of the left additives	$CaCO_3$, pigments, Lubricant, etc.	$\sum_{3}^{n} X_i: \pm 50\ \%$

Furthermore, the hygienic assessment is to be conducted on a size of the smallest product group produced in the case of drinking water pipes. If positive test results are available for the required properties, DIN CERTCO will give its approval for the pipes to be marked with the quality mark for the tested pipe recipe.

M 5 Production

The process for the manufacture of pipes and fittings must ensure even and reproducible production conditions, as well as be documented in accordance with the factory regulations of the pipeline part manufacturer.

The correlation between the test batch and the date of manufacture must be established by factory records. The types of materials used must be entered in these records.

The extruder settings must be monitored; a record is to be kept of important parameters.

M 6 Dimensions

DIN 8062 and DIN EN 1452-2 / DIN EN ISO 15493 as well as the factory records will apply to the dimensions of the pipes. Individual areas were the pipe wall thickness s is exceeded may be as follows: where s ≤ 10 mm, + 0.2* s and where s > 10 mm, + 0.15* s. The average of the wall thickness must lie within the permissible limit dimensions. The wall thicknesses may not be below the permissible threshold.

The coupling dimensions and fittings produced from pressure pipes are governed by DIN EN 1452-3 / DIN EN ISO 15493, as well as by factory regulations.

For other fittings the DIN EN ISO 1452-3, DIN EN ISO 1452-4, DIN EN ISO 15493 resp. the factory records is applicable.

M 7 Pipe connections and seals

Pipe connections are created by means of plain couplings or cementing. Furthermore, the fittings can be connected by means of cementing, cementing on one side and flange connections (with a loose flange and flange adapter for cementing), as well as screw fittings or with a threaded connection which is reinforced on one side. The connections must be in conformity with ISO 1452-5.

The material used for the elastomer sealing ring, which is used in plain coupling connections for pipes, is to be selected in accordance with EN 681-1 and must satisfy the requirements of the respective class. The sealing ring may not have any detrimental impact on the properties of the pipe and may not be the reason why the functional requirements of ISO 1452-5 are not met.

The adhesive(s) may not have any detrimental impact on the properties of the pipe and may not be the reason why the functional requirements of ISO 1452-5 are not met. The adhesives must be classified in accordance with ISO 7387-1, and their properties must conform to ISO 9311-1.

M 8 Delivery form, Packaging, Transport, Storage

The pipes are supplied in straight lengths. The pipes are supplied with smooth ends (G), formed bonded sockets (K) or formed plug socket (S). Iron grey RAL 7011 is the preferred colour for drinking water supply.
The fittings are supplied as flange connections with the loose flange and flange adapter for adhesion, bonding, screw-fit cementing and bonding with a threaded connection which is reinforced on one side.

M 9 Processing and laying guidelines

e pipe manufacturer is required to issue supplementary information about laying in the case of laying measures which go over and beyond the specifications of the DIN standards, DVGW worksheets and KRV laying instructions.

The permissible operating pressure limits must be complied with at operating temperatures > 20 °C.

Table M 5 Minimum marking of the pipes

Designation	Sample marking
Name and/or trademark of the manufacturer	xyz
Quality mark for plastic pipes with a register number	P1R0000
KRV trademark	[1]
Product standard	DIN EN ISO 1452 / DIN 8061/62 / DIN EN ISO 15493
Material and designation	PVC-U
outside diameter x Nominal wall thickness	90 x 4,3
Diameter to the wall thickness	SDR 21
Overall operating coefficient/safety factor Nominal pressure level	C = 2,5 PN 10
Overall operating coefficient/safety factor (nur DN ≥ 110 mm) Nominal pressure level (nur DN ≥ 110 mm)	C = 2,0 PN 10
Manufacturer's details (by name or encrypted) Machine number Production period Production centre (if there are more than one)	 8 21/11/2014 Berlin

[1] observing licensing rights

Table M 6 Minimum designation of the fittings

Designation	Sample marking
Name and/or trademark of the manufacturer [2]	xyz
Quality mark for plastic pipes with a register number	P1R0000
KRV trademark	[1]
Product standard [2]	ISO 1452
Material and designation	PVC-U
outside diameter des anzuschließenden Rohres	63 - 32 - 63
Nominal pressure level	PN 16
Manufacturer's details (by name or encrypted) Production period Production centre (if there are more than one)	 2014 Berlin

[1] observing licensing rights
[2] These details are either to be marked on the fitting or on a plate (on the fitting or packaging).

M 10 Minimum marking

All the pipes are to be marked continuously and permanently (embossing/laser) - at intervals of about 1 m - with the minimum information indicated in Table M 5. Pipes used for the drinking water supply may also be marked with the DVGW mark and the issued registration number. Pressure pipes for further applications which conform to the KTW recommendation may be marked with the application designation "TW" (i. e. suitable for drinking water).

The fittings can optionally be marked with the DVGW mark and the issued registration number. Details about the fittings produced from the pipes may be displayed in the form of an adhesive label, by inkjet printing or via comparable process. In the case of fittings which cannot be marked with all the details because of their shape and dimensions, the packaging unit must display all the information accordingly.

Fittings for drinking water supplies do not have to be additionally marked because all the fittings have to conform to the KTW recommendation.

M 11 Material/goods inward check

The material tests (TT, BRT/PVT, AT) are grouped in Table M 7.

Table M 7 Material test (per moulding compound)

Property	Require-ments for	Requirement (Parameter)	Type test (TT) Initial type testing (ITT)	Factory production control FPC (PVT)	Monitoring test (AT)
PVC: sieve residue	Annex M	acc. to delivery specification (DIN EN ISO 4610 or factory regulation)	-	Acceptance test certificate 3.1	-
PVC: bulk density [b]	Annex M	acc. to delivery specification (DIN EN ISO 60 or factory regulation)	-	Acceptance test certificate 3.1	-
PVC: volatile content	Annex M	acc. to delivery specification (DIN EN ISO 1269 or factory regulation)	-	Acceptance test certificate 3.1	-
PVC: K-value [b]	Annex M	acc. to delivery specification (Rohr: 65 ≤ K ≤ 70; FS: ≥58) (DIN EN ISO 1628-2 or factory regulation)	-	Acceptance test certificate 3.1	-
VCM content of the resin (during hygiene tests) [b]	Annex M DIN EN ISO 1452-1	< 1ppm (0,0001 %) Percent by volume (gas chromatography ISO 6401)	X / FM (documentation review)	-	1x / FM / year (documentation review)
Lubricant: melting range	Annex M	acc. to delivery specification (factory regulation)	-	Acceptance test certificate 3.1	-
Stabilizers: thermal stability[b]	Annex M	acc. to delivery specification (DIN 53381 or factory regulation)	-	Acceptance test certificate 3.1	-
Premixed additives: Composition	Annex M	acc. to delivery specification (DIN 53381 or factory regulation)	-	Acceptance test certificate 3.1	-
Premixed additives: thermal sta-bility[b]	Annex M	acc. to delivery specification (DIN 53381 or factory regulation)	-	Acceptance test certificate 3.1	-
Mixture: thermal stability[b]	Annex M	acc. to delivery specification (DIN 53381 or factory regulation)	-	randomly	-
Mixture: volatile content	Annex M	acc. to delivery specification (DIN EN ISO 1269 or factory regulation)	-	randomly	-
Microbiological testings [a]	Annex M	fulfilles DVGW W 270	X / FM	-	-

[a] Only to be performed if the pipes are to be used for drinking water applications and are marked accordingly.
[b] Applicable for pipe materials and fitting materials

M 12 Pipe, fitting and pipe system tests

The pipe tests (TT, BRT/PVT, AT) are grouped in Table M 8.

The (external) checks should be carried out on the dimensions/types/groups which have not previously been selected for a monitoring test (AT).

The checks should be carried out on the largest production volume for each group.

Table M 8 Pipe, fitting and pipe system tests

Property	Require-ment for	Requirement (Parameter)	Type test (TT) per moulding compound				Internal monitoring (BRT/PVT)	External monitoring (AT)
			Testing to be conducted at [a, b]				Factory production control [see 7.1] [c]	Monitoring test [c] [see 5.2.3]
			N (ITT)	D	M	E		
Tests on pipes:								
Classification MRS value	Annex M ISO 1452-1	Refer to section M 4 (MRS ≥ 25 MPa; 20°C/60°C per 5 samples; ISO 12162 / ISO 1167)	1x / FM	-	X	-	-	-
Density	Annex M ISO 1452-2	1350 kg/m³ - 1 460 kg/m³ (ISO 1183-1)	1x / FM	-	X	-	-	1x / act.FM / year
Condition	Annex M ISO 1452-2	smooth, clean, free from bub-bles/scores Ends of pipes: vertical, burr-free	1x / PG / FM	X	X	X	1x / Extr. / DN / every 2h	1x / PG / half-year
Colour	Annex M ISO 1452-2	Primary colour greyish, RAL 7032; oth-ers permissble	1x / PG / FM	X	X	X	1x / Extr. / DN / every 2h	1x / PG / half-year
Dimensions	Annex M ISO 1452-2	acc. to factory standard; dev. to 0,2 s (s≤10 mm) and. 0,15 s (s>10 mm) [if necessary adjust marking]	1x / PG / FM	X	X	X	1x / Extr. / DN / every 2h	1x / PG / half-year
Designation	Annex M ISO 1452-2	See table Annex M	-	-	-	-	1x / Extr. / DN / every 2h	1x / PG / half-year
Opacity (if required)	Annex M ISO 1452-2	≤ 0,2 % visible light (ISO 7686)	1x / FM / min e	-	X	-	-	-
Impact strength (Falling weight) [d]	Annex M ISO 1452-2	TIR ≤ 10 % (0°C; EN 744; see section M14)	1x / PG / FM	-	X	X	1x / Extr. / DN / startup and 1x / week	1x / PG / half-year
Impact bending strength [d]	Annex M	TIR ≤ 10 % (see section M 14)	1x / PG / FM	-	X	X	1x / Extr. / DN / startup and 1x / week	1x / PG / half-year

Property		Require-ment for	Requirement (Parameter)	Type test (TT) per moulding compound				Internal monitoring (BRT/PVT)	External monitoring (AT)
				Testing to be conducted at [a, b]				Factory production control [see 7.1] [c]	Monitoring test [c] [see 5.2.3]
				N (ITT)	D	M	E		
Creep inter-nal pres-sure strengt h	60°C; 12,5 MPa	Annex M ISO 1452-2	>1000h (3 samples resp. acc. to factory regulation; ISO 1167-1/-2)	1x / PG / FM	X	X	X	1x / PG / act.FM / year	1x / PG / year
	20°C; 42 MPa	Annex M ISO 1452-2	> 1 h (3 samples resp. acc. acc. to factory regulation; ISO 1167-1/-2)	1x / PG / FM	X	X	X	1x / Extr. / DN / startup and 1x / week	-
	20°C;m. socket	Annex M ISO 1452-2	> 1 h (DN < 90 mm: 4,2xPN; DN > 90 mm: 3,36xPN; (3 samples resp. acc. to factory regulation; ISO 1167-1/-2)	1x / PG / FM	X	X	X	1x / Extr. / DN / startup and 1x / week	1x / PG / year
	60°C; 15 MPa	Annex M DVGW 335	old testing, see section M 14	1x / PG / FM	X	X	X	1x / Extr. / DN / startup and 1x / week	1x / half-year
Vicat Softening temperature		Annex M ISO 1452-2	VST/B/50 >=80 (ISO 2507-1 / DIN EN 727)	1x / FM	-	X	-	-	1x / act.FM / year
Warm storage Longitudinal reversion		Annex M ISO 1452-2	No changing, Length change <5% (150 °C; s≤8mm:60min; s≤16:120;s>16:240; L=200 mm)	1x / PG	-	-	X	1x / Extr. / DN / startup and 1x / week	1x / PG / half-year
Gel degree (DiChlor-Methan-Test)		Annex M ISO 1452-2	No attack >2mm²; (15°C; 30min; ISO9582 / DIN EN 580 / or acc. to factory regulation)	1x / PG / FM	-	X	X	1x / Extr. / DN / startup and 1x / 24h	1x / PG / half-year
Hygienic compli-ance		Annex M	KTW guideline	X	-	X	X	-	1x / on 1 PG / year
Tests on fittings:									
Classification MRS value		Annex M ISO 1452-1	Verification available (ISO 12162 / ISO 1167)	1x / FM	-	X	-	Verification available	-
Density		Annex M ISO 1452-3	1350 kg/m³ - 1 460 kg/m³ (ISO 1183-1)	1x / FM	-	X	-	-	1x / act.FM / year
Condition		Annex M ISO 1452-3	smooth, clean, free from bub-bles/scores Ends of pipes: vertical, burr-free	1x / FSG / PG / FM	X	X	X	1x / startup and every 4h	1x / PG / half-year
Colour		Annex M ISO 1452-3	Primary colour greyish, RAL 7032; oth-ers permissble	1x / FSG / PG / FM	X	X	X	1x / startup and every 2h	1x / PG / half-year
Dimensions		Annex M ISO 1452-3	acc. to (Factory-)standard	1x / FSG / PG / FM	X	X	X	1x / startup and every 8h	1x / PG / half-year

Property		Require-ment for	Requirement (Parameter)	Type test (TT) per moulding compound				Internal monitoring (BRT/PVT)	External monitoring (AT)
				Testing to be conducted at [a, b]				Factory production control [see 7.1] [c]	Monitoring test [c] [see 5.2.3]
				N (ITT)	D	M	E		
Designation		Annex M ISO 1452-3	see Tab. Annex M	-	-	-	-	1x / startup and every 2h	1x / PG / half-year
Opacity (if required)		Annex M ISO 1452-3	≤ 0,2 % visible light (ISO 7686)	1x / FM / min e	-	X	-	-	-
Deformation of squeeze [e]		Annex M ISO 1452-3	No repture upon deformation 20 % (50 ±5 mm/min; EN 802)	1x / FSG / PG / FM	X	X	X	1x / cavity / 24h	1x / PG / half-year
Creep inter-nal pres-sure strengt h	20°C; 4,2 x PN	Annex M ISO 1452-3	> 1 h (DN≥160: 3,36xPN; min. 1 sam-ple and acc. to factory regulation; ISO 1167-1/-2)	1x / FSG / PG / FM	X	X	X	1x / Cavity / batch (1 sample) and 1x / EG / week (3 samples)	1x / PG / year (3 samples)
	20°C; 3,5 x PN	Annex M ISO 1452-3	> 100h (min. 3 samples and acc. to factory regulation; ISO 1167-1/-2)	-	X	X	X	-	1x / FSG/ PG/ half-year (old testing, see section M 14)
	20°C; 3,2 x PN	Annex M ISO 1452-3	> 1000 h (DN≥160: 2,56xPN; min. 1 sample and acc. to factory regulation; ISO 1167-1/-2)	1x / FSG / PG / FM	X	X	X	1x / Typ / DN / 5 years	1x / PG / year (3 samples)
Vicat softening tem-perature		Annex M ISO 1452-3	VST/B/50 ≥74 °C and acc. to. factory standard (ISO 2507-1 / DIN EN 727)	1x / FM	-	X	-	-	1x / akt.FM / year
Warm storage		Annex M ISO 1452-3	No bubbles/damage; runner-zone 0,3*DN max. 50% from e (150 °C; ≤3mm:15min / ≤10:30 / ≤20:60 / ≤ 30:140 / ≤40:220 / >40:240; 3 samples ;)	1x / FSG / PG / FM	-	-	X	Injection mold.: 1x / cavity / 24h	1x / PG / half-year
Joint test		Annex M	> 1000 h on Creep test (for bonded and screwed joint; 20°C - 1,7 PN / 40°C - 1,3 PN)	1x / PG	-	X	-	-	-
Hygienic compliance		Annex M	KTW guideline	1x / an 1 PG	-	X	X	-	1x / on 1 PG / year
Tests on Valves:									
Classification MRS Wert		Annex M ISO 1452-1	Verification available (ISO 12162 / ISO 1167)	1x / FM	-	X	-	Verification available	-
Density		Annex M ISO 1452-4	1350 kg/m³ - 1 460 kg/m³ (ISO 1183-1)	1x / FM	-	X	-	-	1x / act.FM / year
Condition		Annex M ISO 1452-4	smooth, clean, free from bub-bles/scores Ends of pipes: vertical, burr-free	1x / FSG / PG / FM	X	X	X	1x / startup and every 4h	1x / PG / year

Property	Require-ment for	Requirement (Parameter)	Type test (TT) per moulding compound				Internal monitoring (BRT/PVT)	External monitoring (AT)
			Testing to be conducted at [a, b]				Factory production control [see 7.1] [c]	Monitoring test [c] [see 5.2.3]
			N (ITT)	D	M	E		
Colour	Annex M ISO 1452-4	Basic colour greyish RAL 7032; others permissible	1x / FSG / PG / FM	X	X	X	1x / startup and every 2h	1x / PG / year
Dimensions	Annex M ISO 1452-4	In accordance with factory standard	1x / FSG / PG / FM	X	X	X	1x / startup and every 8h	1x / PG / year
Designation	Annex M ISO 1452-4	s. Tab. Annex M	-	-	-	-	1x / startup and every 2h	1x / PG / year
Opacity (if required)	Annex M ISO 1452-4	≤ 0,2 % visible light (ISO 7686)	1x / FM / min e	-	X	-	-	-
Deformation of squeeze [e]	Annex M ISO 1452-4	No repture upon deformation 20 % (50 ±5 mm/min; EN 802)	1x / FSG / PG / FM	X	X	X	1x / cavity / 24h	1x / PG / year
internal pressure strength	Annex M ISO 1452-4	In acc. with ISO 16135 - ISO 16139 and ISO 21787 (in acc. to ISO 1167-1/-2)	1x / Typ / PG / FM	X	X	X	1x / batch	1x / PG / year
Fatigue strength	Annex M ISO 1452-4	In acc. with ISO 16135 - ISO 16139 and ISO 21787 (in acc. to ISO 1167-1/-2)	1x / Typ / PG / FM	X	X	X	1x / batch	1x / PG / year
Leak tightness hou-sing + close	Annex M ISO 1452-4	In acc. with 16135 - ISO 16139 and ISO 21787 (in acc. to ISO 1167-1/-2)	1x / Typ / PG / FM	X	X	X	1x / batch	1x / PG / year
Vicat softening tem-perature	Annex M ISO 1452-4	VST/B/50 ≥74 °C and in acc. to factory standard (ISO 2507-1 / DIN EN 727)	1x / FM	-	X	-	-	1x / akt.FM / year
Warm storage	Annex M ISO 1452-4	No bubbles/damage; runner-zone 0,3*DN max. 50% von e (150 °C; ≤3mm:15min / ≤10:30 / ≤20:60 / ≤ 30:140 / ≤40:220 / >40:240 ; 3 samples;)	1x / FSG / PG / FM	-	-	X	Injection mold.: 1x / cavity / 24h	1x / PG / year
Joint test	Annex M	> 1000 h on Creep test (for bonded and screwed joint; 20°C - 1,7 PN / 40°C - 1,3 PN)	1x / PG	-	X	-	-	-
Hygienic compliance	Annex M	KTW guideline	1x / on 1 PG	-	X	X	-	1x / an 1 PG / year

Property	Require-ment for	Requirement (Parameter)	Type test (TT) per moulding compound				Internal monitoring (BRT/PVT)	External monitoring (AT)
			Testing to be conducted at [a, b]				Factory production control [see 7.1] [c]	Monitoring test [c] [see 5.2.3]
			N (ITT)	D	M	E		
Tests of suitability for use on the piping system:								
not tensile strength conn.: tightness internal pressure	Annex M ISO 1452-5	No leakage (20 °C ±5K; Abw. 2%; 100 min; test pressure acc. to ISO 1452-5; Norm; ISO 13845)	1x / PG / VA	X	-	X	1x / PG / VA / year	1x / PG / VA / year
not tensile strength conn.: tightness underpressure	Annex M ISO 1452-5	No leakage (20 °C ±5K; dev. 2%; Verf. 5%; test pressure + duration acc. to ISO 1452-5; ISO 13844)	1x / PG / VA	X	-	X	1x / PG / VA / year	1x / PG / VA / year
not tensile strength conn.: tightness creep test	Annex M ISO 1452-5	No leakage < 1000h (20 °C; 1,7xPN [DN>90mm:1,65xPN]; 40 °C; 1,3xPN; ISO 13846)	1x / PG / VA	X	-	X	1x / PG / VA / year	1x / PG / VA / year
tensile strength conn.: tightness internal pressure	Annex M ISO 1452-5	No leakage < 1000h (20 °C; 1,7xPN [DN>90mm:1,65xPN]; 40 °C; 1,3xPN; ISO 13846)	1x / PG / VA	X	-	X	1x / PG / VA / year	1x / PG / VA / year
tensile strength conn.: tightness internal pressure+ underpressure	Annex M ISO 1452-5	No leakage (acc. to ISO 13783)	1x / PG / VA	X	-	X	1x / PG / VA / year	1x / PG / VA / year

[a] N: New system [initial test, see section 5.2.1] M: Change of moulding compound [supplementary test, see section 5.2.2]
E: Extension of the product range [supplementary test, see section 5.2.2] D: Change of design [supplementary test, see section 5.2.2]

[b] The certification applies through to the largest dimension tested for each product group during initial testing. Furthermore, verification must be provided of creep tests conducted on 100 representative pipe samples for the entire production batch for the purposes of initial testing.

[c] The tests to be conducted within the scope of the external monitoring test are to be acknowledged the purposes of self-monitoring.

[d] Verification is to be provided of either the falling weight test (impact strength) or of the impact bending test.

[e] Only for components to which hydrostatic pressure can not be applied

M 13 Number of samples

The number of samples to be taken for the monitoring test is shown in Table M 9.

Table M 9 Minimum number of samples to be taken for monitoring test (type test may require more samples)

Product groups (s. Section 4.1)	Mechan./Physical. examinations		Hygiene examinations number of samples and length
	Number of samples	Length L per sample	
111 (d ≤ 63 mm)	10 + 3 retained sample	1000 mm	d_e ≤ 32 mm: 15 x 1m 32 mm < d_e ≤ 50 mm: 6 x 1m 50 mm < d_e ≤ 110 mm: 4 x 1m 110 mm < d_e : 4 x 0,5m
112 (75 ≤ d ≤ 225 mm)	10 + 3 retained sample	1000 mm	
113 (250 ≤ d ≤ 630 mm)	10 + 3 retained sample	1000 mm	
114 (710 ≤ d ≤ 1000 mm)	10 + 3 retained sample	1000 mm	
111.1 (d ≤ 63 mm)	10 + 3 retained sample	-	d_e ≤ 32 mm: 40 pieces 32 mm < d_e ≤ 63 mm: 20 pieces 50 mm < d_e ≤ 110 mm: 10 pieces 110 mm < d_e : 4 pieces
112.1 (75 ≤ d ≤ 225 mm)	10 + 3 retained sample	-	
113.1 (250 ≤ d ≤ 630 mm)	10 + 3 retained sample	-	
114.1 (710 ≤ d ≤ 1000 mm)	10 + 3 retained sample	-	

M 14 Tests and Consequence in the event of deviations

If the requirements are not met, the causes must be assessed and rectified, and the check must be repeated. As a rule, products which do not meet the specified requirements are to be rejected.

Creep inner pressure behaviour: Provided the following requirements are met, the test verification required within the scope of certification scheme as well as in DIN 8061, DIN EN ISO 1452-2, DIN EN ISO 1452-3 and DIN EN ISO 1452-7 is deemed to have been complied with.

The quality of the pipes must guarantee a shortfall probability of ≤ 0.0015 for the results of the internal pressure creep test under the conditions σ = 15 N/mm^2, ϑ = 60 °C, t ≥ 41.4 h. The shortfall probability is calculated against a lower tolerance limit of 5 h.
FPC test conditions: ϑ = 60 °C, σ = 15 N/mm^2 through to breaking point or max. 1000 h. The results have to be entered in a binomial network. On this binomial network (20% breakage among samples), the control limits with a confidence range of 99.73% are to be applied to the failure percentage determined in the cumulative frequency network under the aforementioned conditions.

Frequency of the FPC: Two pipe samples are to be taken after each extruder start-up, at least once a week. An internal pressure creep test is to be conducted on a pipe sample under test conditions of ϑ = 60 °C, σ = 15 N/mm^2 through to the point of breakage or for max. 1000 h. Verification ϑ = 60 °C, σ = 12,5 N/mm^2, t ≥ 1000 h is to be performed for each size of pipe manufactured every three years for factory production control purposes.

FPC conclusion: Approval can be given after an operating time of only 41.4 h. If a creep failure occurs at an operating time < 5 h, the production batch affected is to be rejected. If the creep failure is discovered between 5 and 41.4 h, the second pipe sample taken must achieve a minimum test period of t = 55 h under test conditions of ϑ = 60 °C, σ = 12.5 N/mm^2 (test pressure in accordance with DIN 8061/ DIN EN ISO 1452). If the upper control limit in the binomial network is exceeded, a negative, statistically secured deviation exists, the causes of which must be determined, possibly necessitating measures to be taken in production.

Testing requirements AT: σ = 15 N/mm^2, ϑ = 60 °C;
Frequency AT: simultaneous on 5 pipe samples;
Conclusion AT: The evaluation is carried out by the follow-up smapling plan. Here are the characteristics used as a basis:

Number of samples	n = 5
Lower tolerance level	T_u = 5 h
Acceptance limit	P_o = 0,2 %
Rejection limit	P_1 = 5 %
Acceptance probability P_o	W_o = 0,90
Acceptance probability P_1	W_1 = 0,10
Standard deviation in the log. decade	σ^* = 0,35

The test is deemed to have been passed if there are no incidences of creep failure within a joint period of 41.4 h during which the five pipe samples undergo testing. The test is deemed to have been failed if creep failure occurs within a joint period of 7.3 h during which the five pipe samples undergo testing. If a creep failure occurs between these two time limits, testing must be continued until such time as the following condition is met:

$$\lg t_{A1} = \frac{X_A - \Sigma \lg t_1}{n - b}$$

This means:
t_{A1} Acceptance test period in h following the failure of the first test specimen X_A Sum of the logarithms of the Acceptance test period = 8,085.
t_1 Test period of failed samples (b) in h.
If the acceptance test period is not met, the company must be asked to provide the three reserve samples from the associated sampling process, and they must be tested under conditions of σ = 12.5 N/mm^2, ϑ = 60 °C, for a minimum operating time of 55 h. No failures may occur here.
If the production batch also includes push-fit pipes, the internal pressure creep test is to be conducted, in accordance with the statistical model method shown above, once on smooth pipes and once on pipes with push-fit connections (five test specimens).
The requirement for external monitoring of fittings for internal pressure creep strength can be verified by conducting tests on one fitting per product group at a test pressure of 3.5 x PN. If an operating time of ≥ 100 h is achieved by the sample, the test is deemed to have been passed. If a creep

failure of 100 h occurs, the internal pressure creep test must be repeated on a subsequent sample at a test pressure of 3.2 x PN for a period of 1000 h. A minimum operating time of ≥ 1000 h must be achieved here. For the purposes of in-house monitoring (award test), verification must be provided of a minimum operating time of 1 h (1000 h) at an operating pressure of 4.2 x PN (3.2 x PN).

Table M 10 Molt and heights of fall of the falling weight

Outside diameter d_n[mm]	SDR 11 bis SDR 21 (level of testing M)		SDR 26 to SDR 41 (level of testing H)	
	Weight [kg]	Height of fall [mm]	Weight [kg]	Height of fall [mm]
20	0,5	400	0,5	400
25		500		500
32		600		600
40		800		800
50		1000		1000
63	0,8	1000	0,8	1000
75		1000		1200
90		1200	1,0	2000
110	1,0	1600	1,6	2000
125	1,25	2000	2,5	2000
140	1,6	1800	3,2	1800
160		2000		2000
180	2,0	1800	4,0	1800
200		2000		2000
225	2,5	1800	5,0	1800
250		2000		2000
280	3,2	1800	6,3	1800
≥ 315		2000		2000

Impact strength (falling weight): During testing in accordance with DIN EN 744, the true impact rate (TIR) may not be any greater than 10 %. Refer to Table M 10 for the drop weight and height of fall. A drop weight of type d25 is to be used for falling weights of up to 0.8 kg, and type d90 is to be used for fdrop weights of 1 kg or more.

Impact bending test: The failure rate may not be any greater than 10% of the samples tested. Samples are taken from the pipes in a longitudinal direction. The samples are taken from the same section of pipe by machining, distributed as evenly as possible over the circumference of the pipe. They are not machined on the surface. The impact bending test in accordance with ISO 179 / ISO 9854 is performed on 10 samples albeit with the test parameters according to Table M 11 whereby the impact is exercised upon the outer surface of the sample. Testing is conducted at (23 ± 2) °C.

It serves to determine whether the samples break. If more than 10 % of the samples are broken during this test, the impact bending test must be repeated on 20 new samples from the same batch. The breakage quota for the first and second tests is assessed together.

Table M 11 Test parameters for the impact bending test

Pipe		**Sample**			**Energy of pend-lum impact**	**Distance of thrust bearing**
Outside diameter d_1 [mm]	Wall thickness s_1 [mm]	Length [mm]	Width [mm]	Heigth [mm]	[J]	[mm]
< 25	≙	(100 ± 2) mm long pipe section			15	$70^{+0,5}_{0}$
≥ 25	≤ 9,5	50 ± 1	6 ± 0,2	In accordance with the raw wall thickness s_1	15	$40^{+0,5}_{0}$
> 25	> 9,5	120 ± 2	15 ± 0,5		50	$70^{+0,5}_{0}$

Annex N ZP 1.1.1 DA - Pressure pipes and fittings made of PVC-U (unplasticized polyvinyl chloride) for industry/general

(Edition: 17.03.2015)

N 1 Inspection and certification principles (also refer to section 2)

DIN 8061	Unplasticized Polyvinyl chloride (PVC-U) pipes - General quality requiremetns and testing; DIN 8061:2009-10
DIN 8062	Unplasticized Polyvinyl chloride (PVC-U) pipes - Dimensions; DIN 8062:2009-10
DIN EN ISO 15493	PlasticS piping systems for industrial applications - Acrylnitril-Butadien-Styrol (ABS), unplasticized Polyvinyl chloride (PVC-U) and chlorynated Polyvinylchlorid (PVC-C) - Specifications for pipeline components and the pipeline system; Metric series (ISO 15493:2003); German version EN ISO 15493:2003-10
DIN EN 10204:2005-1	Metallic products - Types of inspection documents; German version EN 10204:2004

N 2 General

Annex N (ZP 1.1.1 DA) of this certification scheme applies to pressure pipes and fittings made from unplasticized polyvinyl chloride (PVC-U), which are marked with the "DIN*plus"* quality mark from DIN CERTCO. The quality enhancement is summarised in Table N 1.

Table N 1 Quality enhancement

Requirements	Annex N ZP 1.1.1 DA	DIN 8061	DIN 8062	DIN EN ISO 15493	Refer to:
Participation in the Plastic Pipe Association (KRV) re-cycling system	+	-	-	-	Section 1.2
Goods inward check	+	-	-	-	Annex N
Half-yearly external monitoring	+	-	-	-	Annex N
Strict requirements on the used materials	+	-	-	-	Annex N

The pipeline systems are used for water supply and for drainage and sewage pressure lines, both underground and overground. Pipeline systems may be used for the purposes of drinking water pipes provided they satisfy the CDW guidelines and are marked with the application designation TW (denoting drinking water quality).

Usage category: Pressure pipes for additional applications: for example for industrial pipes according to DIN 8061/8062 and DIN EN ISO 15493.

Pressure pipes made of PVC-U according to Annex N (ZP 1.1.1 DA) of this certification scheme, which are also approved by a general building approval, the information must comply with the requirements and the general type approval. After issuing the certificate of compliance by the certification body DIN CERTCO, the designation shall be made accordingly.

N 3 Product groups

The product groups (based upon DIN CEN/TS 1452-7) are shown in Table N 2. If all the requirements are met, certificates are issued for each product group and production facility.

Furthermore, fittings are assigned to the following fittings groups (FSG): (1) bows; (2) brackets/T-pieces; (3) other fittings (couplings, caps, etc.); (4) valves.

Table N 2 Product groups

Product group	Product type	Nominal diameter (DN/OD)
121	Pipes	d ≤ 63 mm
122		75 ≤ d ≤ 225 mm
123		250 ≤ d ≤ 630 mm
124		710 ≤ d ≤ 1000 mm
121.1	Fittings	d ≤ 63 mm
122.2		75 ≤ d ≤ 225 mm
123.3		250 ≤ d ≤ 630 mm
124.4		710 ≤ d ≤ 1000 mm

N 4 Substance / materials used

The used material for the pipes and fittings is PVC-U according to DIN 8061 resp. DIN EN ISO 15493. The K-value according to DIN EN ISO 13229 for the pipes has to be 65 at least and should not exceed the value 70. The K-value for fittings has to be 58 at least.

The verification of long-term stability (internal pressure creep behaviour) for 20 °C must be performed in accordance with the processes defined in DIN EN ISO 9080 or DIN 16887 for ≥ 100 years for each type of stabiliser used in the stabiliser system (see Table M 3). The internal pressure creep curves determined in this way may not be below the reference characteristics (minimum curves) specified in DIN 8061 at any point. An LCL value ≥ 25 N/mm^2 (MRS 250) must be achieved at 20°C and 50 years.

The pipe manufacturer must ensure that the verification of long-term stability is provided for all the types of stabiliser used by it and is submitted to DIN CERTCO. The verification of long-term stability does not have to be provided anew for pipe recipes for which there has been long-term experience between the certification agency (DIN CERTCO) and the pipe manufacturers.

The verification of long-term stability in accordance with DIN EN ISO 9080 is deemed to have been provided for the types of stabilisers which are tested and positively assessed within the scope of the GKR test programme 2000.

The long-term stability (internal pressure creep behaviour) is verified by the pipe manufacturer in accordance with Table N 3 for sets of five pipe samples or fittings of any size from the same production batch per test voltage.

Tablle N 3 Testing for internal pressure for the authorization from Stabiliser types

Testing temperature ϑ [°C]	Testing pressure σ [N/mm²]	Testing periode t [h]	
20	42	≥ 1	untill break max. 100
	35	≥ 100	untill break max. 2000
	32	≥ 1000	untill break max. 3000
60	17	≥ 1	untill break max. 100
	15	≥ 100	untill break max. 2000
	10	≥ 1000	untill break max. 3000

By the application of drinking water, the stabiliser recipe and the pipe recipe must conform to prevailing white lists. The guideline values of the basic and supplementary requirements for hygienic compliance in accordance with CDW guidelines (guidelines laid down by the Federal Environmental Protection Agency (UBA) for the hygienic assessment of organic materials in contact with drinking water) must be complied with.

New material must be used for the production of the pipes. The use of recycled material of the same type that used in the pipe manufacturer's pressure pipe production is permissible.

Returned, reconditioned and recycled material may not be used.

The pipe manufacturer must conduct an approval test in each production centre on a set of dimensions for each change in pipe recipe over and beyond the limit deviations set out in Table N 4; scope in accordance with the monitoring test.

Table N 4 Rohrrezeptur limiting deviations

Components	Art	Range X resp. limiting deviations
PVC-resin 100 components	K-value	X_1 : ± 2
Stabilisation system on the basis of:	1) Pb or 2) CaZn or 3) Sn or 4) OB or 5) others	X_2: ± 40 %
Total amount of the left additives	$CaCO_3$, Pigments, Lubricant, etc.	$\sum_{3}^{n} X_i$: ± 50 %

Furthermore, the hygienic assessment is to be conducted on a size of the smallest product group produced in the case of drinking water pipes. If positive test results are available for the required properties, DIN CERTCO will give its approval for the pipes to be marked with the quality mark for the tested pipe recipe.

N 5 Production

The process for the manufacture of pipes and fittings must ensure even and reproducible production conditions, as well as be documented in accordance with the factory regulations of the pipeline part manufacturer.

The correlation between the test batch and the date of manufacture must be established by factory records. The types of materials used must be entered in these records.

The extruder settings must be monitored; a record is to be kept of important parameters.

N 6 Dimensions

DIN 8062 and DIN EN ISO 15493 as well as the factory regulations will apply to the dimensions of the pipes. The individual cases where the wall thickness s is exceeded may be +0.2 s at s ≤ 10 mm and +0.15 s at s > 10 mm. The average of the wall thickness must lie within the permissible limit dimensions. The wall thicknesses may not be below the permissible threshold.

The coupling dimensions and fittings produced from pressure pipes are governed by DIN EN ISO 15493, as well as by factory regulations.

DIN EN ISO 15493 and factory regulations will apply for other fittings.

N 7 Pipe connections and seals

Pipe connections are created by means of socket joint or bonding. Furthermore, the fittings can be connected by means of bonding, bonding on one side and flange connections (with a loose flange and flange adapter for bonding), as well as screw fittings or with a threaded connection which is reinforced on one side. The connections must be in conformity with ISO 15493.

The material used for the elastomer sealing ring, which is used in plain coupling connections for pipes, is to be selected in accordance with EN 681-1 and must satisfy the requirements of the respective class. The sealing ring may not have any detrimental impact on the properties of the pipe and may not be the reason why the functional requirements of ISO 15493 are not met.

The adhesive(s) may not have any detrimental impact on the properties of the pipe and may not be the reason why the functional requirements of ISO 1452-5 are not met. The adhesives must be classified in accordance with ISO 7387-1, and their properties must conform to ISO 9311-1.

N 8 Delivery form, Packaging, Transport, Storage

The pipes are supplied in straight lengths. The pipes are supplied with smooth ends (G), moulded-on solvent bonded sockets (K) or moulded-on socket joint fittings (S).

The fittings are supplied as flange connections with the loose flange and flange adapter for adhesion, bonding, screw-fit bonding and bonding with a threaded connection which is reinforced on one side.

N 9 Processing and laying guidelines

The pipe manufacturer is required to issue supplementary information about laying in the case of laying measures which go over and beyond the specifications of the DIN standards, DVGW worksheets and KRV laying instructions.

The permissible operating pressure limits must be complied with at operating temperatures > 20 °C.

Table N 5 Minimum marking of the pipes

Designation	Sample marking
Name and/or trademark of the manufacturer	xyz
Quality mark for plastic pipes with a register number	P1R0000
KRV trademark	[1]
Product standard	DIN 8061/62 / DIN EN ISO 15493
Material and designation	PVC-U
outside diameter x nominal wall thickness	90 x 4,3
Diameter to the wall thickness	SDR 21
Overall operating coefficient/safety factor Nominal pressure level	C = 2,5 PN 10
Overall operating coefficient/safety factor (only DN ≥ 110 mm) Nominal pressure level (only DN ≥ 110 mm)	C = 2,0 PN 10
Manufacturer's details (by name or encrypted) Machine number Production period Production centre (if there are more than one)	 8 21/11/2014 Berlin

[1] observing licensing rights

N 10 Minimum marking

All the pipes are to be marked continuously and permanently - at intervals of about 1 m - with the minimum information indicated in Table N 5. Pipes used for the drinking water supply may also be marked with the DVGW mark and the issued registration number. Pressure pipes for further applications which conform to the CDW recommendation may be marked with the application designation "TW" (i. e. suitable for drinking water).

The fittings are to be marked continuously and permanently with the minimum information indicated in Table N 6. The fittings can optionally be marked with the DVGW mark and the issued registration number. Details about the fittings produced from the pipes may be displayed in the form of an adhesive label, by inkjet printing or via comparable process. In the case of fittings which cannot be marked with all the details because of their shape and dimensions, the packaging unit must display all the information accordingly.

Fittings for drinking water supplies do not have to be additionally marked because all the fittings have to conform to the CDW recommendation.

Table N 6 Minimum marking of the fittings

Designation	Sample marking
Name and/or trademark of the manufacturer [2]	xyz
Quality mark for plastic pipes with a register number	P1R0000
KRV trademark	[1]
Product standard [2]	DIN EN ISO 15493
Material and designation	PVC-U
outside diameter of the inserted pipe	63 - 32 - 63
Nominal pressure level	PN 16
Manufacturer's details (by name or encrypted) Production period Production centre (if there are more than one)	 2014 Berlin

[1] observing licensing rights
[2] These details are either to be marked on the fitting or on a plate (on the fitting or packaging).

N 11 Material/goods inward check

The material tests (TT, BRT/PVT, AT) are grouped in Table N 7.

Table N 7 Material test (per moulding compound)

Property	Require-ments for	Requirement (Parameter)	Type test (TT)	Factory production control FPC (PVT)	Monitoring test (AT)
			Initial type testing (ITT)		
PVC: sieve residue	Annex N	acc. to delivery specification (DIN EN ISO 4610 or factory regulation)	-	Acceptance test certificate 3.1	-
PVC: bulk density [b]	Annex N	Acc. delivery specification (DIN EN ISO 60 or factory regulation)	-	Acceptance test certificate 3.1	-
PVC: volatile content	Annex N	acc. to delivery specification (DIN EN ISO 1269 or factory regulation)	-	Acceptance test certificate 3.1	-
PVC: K-value [b]	Annex N	acc. to delivery specification (Pipe: 65 ≤ K ≤ 70; FS: ≥58) (DIN EN ISO 1628-2 or factory regulation)	-	Acceptance test certificate 3.1	-
VCM content of the resin (during hygiene tests) [b]	Annex N DIN EN ISO 1452-1	< 1ppm (0,0001 %) Percent by volume (Gaschromatographie ISO 6401)	X / FM (documentation review)	-	1x / FM / year (documentation review)
Lubricant: melting range	Annex N	acc. to delivery specification (factory regulation)	-	Acceptance test certificate 3.1	-
Stabilizers: thermal stability[b]	Annex N	acc. to delivery specification (DIN 53381 or factory regulation)	-	Acceptance test certificate 3.1	-
Premixed additives: Composition	Annex N	acc. to delivery specification (DIN 53381 or factory regulation)	-	Acceptance test certificate 3.1	-
Premixed additives: thermal sta-bility[b]	Annex N	acc. to delivery specification (DIN 53381 or factory regulation)	-	Acceptance test certificate 3.1	-
Mixture: thermal stability[b]	Annex N	acc. to delivery specification (DIN 53381 or factory regulation)	-	randomly	-
Mixture: volatile content	Annex N	acc. to delivery specification (DIN EN ISO 1269 or factory regulation)	-	randomly	-
Microbiological testings [a]	Annex N	fulfilles DVGW W 270	X / FM	-	-

[a] Only to be performed if the pipes are to be used for drinking water applications and are marked accordingly.
[b] Approvedfor pipe and fittings material

N 12 Pipe-, Fitting- and piping sytem test

The pipe-/ fittings- and pipe system testing (TT, BRT/PVT, AT) are grouped on Table N 8.
The (external) checks should be carried out on the dimensions/types/groups which have not previously been selected for a monitoring test (AT).

The checks should be carried out on the largest production volume for each group.

Tabelle N 8 Pipe-, Fitting- and piping system testing

Property	require-ment for	requirement (Parameter)	Type test (TT) per molding compound				Internal monitoring (BRT/PVT)	External monitoring (AT)
			Testing to be conducted at [a, b]				Factory production control [see 7.1] [c]	Monitoring test [c] [see 5.2.3]
			N (ITT)	D	M	E		
Tests on pipes:								
Classification MRS Wert	Annex N	s. Section M 4 (MRS ≥ 25 MPa; 20°C/60°C every 5 samples; ISO 12162 / ISO 1167)	1x / FM	-	X	-	-	-
Density	Annex N	1350 kg/m³ - 1 460 kg/m³ (ISO 1183-1)	1x / FM	-	X	-	-	1x / akt.FM / half-year
Condition	Annex N	smooth, clean, free from bub-bles/scores Ends of pipes: vertical, burr-free	1x / PG / FM	X	X	X	1x / Extr. / DN / alle 2h	1x / PG / half-year
Colour	Annex N	Primary colour greyish, RAL 7032; oth-ers permissble	1x / PG / FM	X	X	X	1x / Extr. / DN / alle 2h	1x / PG / half-year
Dimensions	Annex N	acc. to Factory standard; dev. to 0,2 s (s≤10 mm) and. 0,15 s (s>10 mm) [if necessary adjust marking]	1x / PG / FM	X	X	X	1x / Extr. / DN / alle 2h	1x / PG / half-year
Designation	Annex N	See table Annex M	-	-	-	-	1x / Extr. / DN / alle 2h	1x / PG / half-year
Opacity (if required)	Annex N	≤ 0,2 % visible light (ISO 7686)	1x / FM / min e	-	X	-	-	-
Impact strength (drop weight) [d]	Annex N	TIR ≤ 10 % (0°C; EN 744; s. Section N14)	1x / PG / FM	-	X	X	1x / Extr. / DN / start-up and 1x / week	1x / PG / half-year
Impact bending strength [d]	Annex N	TIR ≤ 10 % (s. Section N 14)	1x / PG / FM	-	X	X	1x / Extr. / DN / start-up und 1x / week	1x / PG / half-year

Property		require-ment for	requirement (Parameter)	Type test (TT) per molding compound				Internal monitoring (BRT/PVT)	External monitoring (AT)
				Testing to be conducted at [a, b]				Factory production control [see 7.1] [c]	Monitoring test [c] [see 5.2.3]
				N (ITT)	D	M	E		
Creep inter-nal pres-sure strengt h	60°C; 12,5 MPa	Annex N	>1000h (3 samples resp. acc. to factory regulation; ISO 1167-1/-2)	1x / PG / FM	X	X	X	1x / EG / act.FM / year	1x / PG / year
	20°C; 42 MPa	Annex N	> 1 h (3 samples resp. acc. to factory regulation; ISO 1167-1/-2)	1x / PG / FM	X	X	X	1x / Extr. / DN / startup and 1x / week	-
	20°C;m. socket	Annex N	> 1 h (DN < 90 mm: 4,2xPN; DN > 90 mm: 3,36xPN; (3 samples or acc. to factory regulation; ISO 1167-1/-2)	1x / PG / FM	X	X	X	1x / Extr. / DN / startup and 1x / week	1x / PG / year
	60°C; 15 MPa	Annex N	old testing, see section M 14	1x / PG / FM	X	X	X	1x / Extr. / DN / startup and 1x / week	1x / half-year
Vicat Softening temperature		Annex N	VST/B/50 >=80 (ISO 2507-1 / DIN EN 727)	1x / FM	-	X	-	-	1x / act.FM / year
Warm storage Longitudinal reversion		Annex N	No changing, Length change <5% (150 °C; s≤8mm:60min; s≤16:120;s>16:240; L=200 mm)	1x / PG	-	-	X	1x / Extr. / DN / startup and 1x / week	1x / PG / half-year
Geld degree (DiCh-lorMethan-Test)		Annex N	No attack >2mm²; (15°C; 30min; ISO9582 / DIN EN 580 / or acc. to factory regulation)	1x / PG / FM	-	X	X	1x / Extr. / DN / startup and 1x / 24h	1x / PG / half-year
Hygienic compli-ance		Annex N	KTW guideline	1x / PG	-	X	X	-	1x / PG / year
Test on fittings:									
Classification MRS value		Annex N	Verification available (ISO 12162 / ISO 1167)	1x / FM	-	X	-	Verification available	-
Density		Annex N	1350 kg/m³ - 1 460 kg/m³ (ISO 1183-1)	1x / FM	-	X	-	-	1x / act.FM / year
Condition		Annex N	smooth, clean, free from bub-bles/scores Ends of pipes: vertical, burr-free	1x / FSG / PG / FM	X	X	X	1x / startup and every 4h	1x / EG / half-year
Colour		Annex N	Basic colour greyish RAL 7032; others permissible	1x / FSG / PG / FM	X	X	X	1x / startup and every 2h	1x / EG / half-year
Dimensions		Annex N	in acc. with factory standard	1x / FSG / PG / FM	X	X	X	1x / startup and every 8h	1x / EG / half-year

Property		require-ment for	requirement (Parameter)	Type test (TT) per molding compound				Internal monitoring (BRT/PVT)	External monitoring (AT)
				Testing to be conducted at [a, b]				Factory production control [see 7.1] [c]	Monitoring test [c] [see 5.2.3]
				N (ITT)	D	M	E		
Designation		Annex N	s. Tab. Annex M	-	-	-	-	1x / startup and every 2h	1x / PG / half-year
Opacity (if required)		Annex N	≤ 0,2 % visible light (ISO 7686)	1x / FM / min e	-	X	-	-	-
Deformation of squeeze [e]		Annex N	No repture upon deformation 20 % (50 ±5 mm/min; EN 802)	1x / FSG / PG / FM	X	X	X	1x / cavity / 24h	1x / PG / half-year
Creep inter-nal pres-sure strengt h	20°C; 4,2 x PN	Annex N	> 1 h (DN≥160: 3,36xPN; min. 1 sample and acc. to factory regulation; ISO 1167-1/-2)	1x / FSG / PG / FM	X	X	X	1x / cavity/ batch (1 sample) and 1x / PG / W ((3 samples))	1x / PG / year (3 samples)
	20°C; 3,5 x PN	Annex N	> 100h (mind. 3 samples and acc. to factory regulation; ISO 1167-1/-2)	-	X	X	X	-	1x / FSG/ PG/ halb-year (old testing, see section M 14M 14)
	20°C; 3,2 x PN	Annex N	> 1000 h (DN≥160: 2,56xPN; min 1 sample and acc. to factory regulation; ISO 1167-1/-2)	1x / FSG / PG / FM	X	X	X	1x / Typ / DN / 5 years	1x / PG / year (3 samples)
Vicat Softening temperature		Annex N	VST/B/50 ≥74 °C and acc. to factory standard (ISO 2507-1 / DIN EN 727)	1x / FM	-	X	-	-	1x / act.FM / year
Warm storage		Annex N	No bubbles/damage; runner-zone 0,3*DN max. 50% von e (150 °C; ≤3mm:15min / ≤10:30 / ≤20:60 / ≤ 30:140 / ≤40:220 / >40:240 ; 3 samples;)	1x / FSG / PG / FM	-	-	X	Inject. : 1x / cavity / 24h	1x / PG / half-year
joint test		Annex N	> 1000 h on Creep test (for bonded and screwed joint; 20°C - 1,7 PN / 40°C - 1,3 PN)	1x / PG	-	X	-	-	-
Hygienic compli-ance		Annex N	KTW guidline	1x / PG	-	X	X	-	1x / PG / year
Tests on valves:									
Classification MRS Wert		Annex N	Verification available (ISO 12162 / ISO 1167)	1x / FM	-	X	-	Verification available	-
Density		Annex N	1350 kg/m³ - 1 460 kg/m³ (ISO 1183-1)	1x / FM	-	X	-	-	1x / act.FM / year
Condition		Annex N	smooth, clean, free from bub-bles/scores Ends of pipes: vertical, burr-free	1x / FSG / PG / FM	X	X	X	1x / startup and every 4h	1x / PG / year

Property	require-ment for	requirement (Parameter)	Type test (TT) per molding compound				Internal monitoring (BRT/PVT)	External monitoring (AT)
			Testing to be conducted at [a, b]				Factory production control [see 7.1] [c]	Monitoring test [c] [see 5.2.3]
			N (ITT)	D	M	E		
Colour	Annex N	Basic colour greyish RAL 7032; others permissible	1x / FSG / PG / FM	X	X	X	1x / startup and every 2h	1x / PG / year
Dimensions	Annex N	in acc. with factory standard	1x / FSG / PG / FM	X	X	X	1x / startup and every 8h	1x / PG / year
Designation	Annex N	s. Tab. Annex M	-	-	-	-	1x / startup and every 2h	1x / PG / year
Opazität (if requi-red)	Annex N	≤ 0,2 % visible light (ISO 7686)	1x / FM / min e	-	X	-	-	-
Deformation of squeeze [e]	Annex N	No repture upon deformation 20 % (50 ±5 mm/min; EN 802)	1x / FSG / PG / FM	X	X	X	1x / cavity / 24h	1x / PG / year
Internal pressure strength	Annex N	In acc. with ISO 16135 - ISO 16139 and ISO 21787 (in acc. to ISO 1167-1/-2)	1x / Typ / PG / FM	X	X	X	1x / batch	1x / PG / year
Fatigue strength	Annex N	In acc. with ISO 16135 - ISO 16139 and ISO 21787 (in acc. to ISO 1167-1/-2)	1x / Typ / PG / FM	X	X	X	1x / batch	1x / PG / year
Leak tightness housing + close	Annex N	acc. to ISO 16135 - ISO 16139 and ISO 21787 (acc. to ISO 1167-1/-2)	1x / Typ / PG / FM	X	X	X	1x / batch	1x / PG / year
Vicat Softening temperature	Annex N	VST/B/50 ≥74 °C and acc. to factory standard (ISO 2507-1 / DIN EN 727)	1x / FM	-	X	-	-	1x / act.FM / year
Warm storage	Annex N	No bubbles/damage; runner-zone 0,3*DN max. 50% von e (150 °C; ≤3mm:15min / ≤10:30 / ≤20:60 / ≤ 30:140 / ≤40:220 / >40:240 ; 3 samples;)	1x / FSG / PG / FM	-	-	X	inject.: 1x / cavity / 24h	1x / PG / year
Joint test	Annex N	> 1000 h on Creep test (for bonded and screwed joint; 20°C - 1,7 PN / 40°C - 1,3 PN)	1x / PG	-	X	-	-	-
Hygienic compliance	Annex N	KTW guideline	1x / PG	-	X	X	-	1x / PG / year

Property	require-ment for	requirement (Parameter)	Type test (TT) per molding compound				Internal monitoring (BRT/PVT)	External monitoring (AT)
			Testing to be conducted at [a, b]				Factory production control [see 7.1] [c]	Monitoring test [c] [see 5.2.3]
			N (ITT)	D	M	E		
Tests for suitability for use on piping system:								
not tensile strength connection: tight-ness internal pressure	Annex N	No leakage (20 °C ±5K; deviation. 2%; 100 min; pressure acc. to ISO 1452-5; Norm; ISO 13845)	1x / PG / VA	X	-	X	1x / PG / VA / year	1x / PG / VA / year
not tensile strength connection: tight-ness underpressure	Annex N	No leakage (20 °C ±5K; Abw. 2%; Verf. 5%; duration and pressure acc. to 1452-5; ISO 13844)	1x / PG / VA	X	-	X	1x / PG / VA / year	1x / PG / VA / year
not tensile strength connection: tightness creep test	Annex N	No leakage < 1000h (20 °C; 1,7xPN [DN>90mm:1,65xPN]; 40 °C; 1,3xPN; ISO 13846)	1x / PG / VA	X	-	X	1x / PG / VA / year	1x / PG / VA / year
tensile strength connection: tightness internal pressure	Annex N	No leakage < 1000h (20 °C; 1,7xPN [DN>90mm:1,65xPN]; 40 °C; 1,3xPN; ISO 13846)	1x / PG / VA	X	-	X	1x / PG / VA / year	1x / PG / VA / year
tensile strength connection: tightness internal pressure+ underpressure	Annex N	No leakage (acc. to ISO 13783)	1x / PG / VA	X	-	X	1x / PG / VA / year	1x / PG / VA / year

[a] N: New system [initial test, see section 5.2.1] M: Change of moulding compound [supplementary test, see section 5.2.2]
E: Extension of the product range [supplementary test, see section 5.2.2] D: Change of design [supplementary test, see section 5.2.2]
[b] The certification applies through to the largest dimension tested for each product group during initial testing. Furthermore, verification must be provided of creep tests conducted on 100 representative pipe samples for the entire production batch for the purposes of initial testing.
[c] The tests to be conducted within the scope of the external monitoring test are to be acknowledged the purposes of self-monitoring.
[d] Verification is to be provided of either the falling weight test (impact strength) or of the impact bending test.
[e] Only for components to which hydrostatic pressure can not be applied

N 13 Number of samples

The number of samples to be taken for the monitoring test is shown in Table N 9.

Tabelle N 9 Minimum number of samples to be taken for monitoring test (type test may require more samples)

Product groups (s. Section 4.1)	Mechan./Physical. examinations		Hygienic examinations number of samples and length
	Number of samples	Length L per sample	
121 (d ≤ 63 mm)	10 + 3 retained sample	1000 mm	d_e ≤ 32 mm: 15 x 1m
122 (75 ≤ d ≤ 225 mm)	10 + 3 retained sample	1000 mm	32 mm < d_e ≤ 50 mm: 6 x 1m
123 (250 ≤ d ≤ 630 mm)	10 + 3 retained sample	1000 mm	50 mm < d_e ≤ 110 mm: 4 x 1m
124 (710 ≤ d ≤ 1000 mm)	10 + 3 retained sample	1000 mm	110 mm < d_e : 4 x 0,5m
121.1 (d ≤ 63 mm)	10 + 3 retained sample	-	d_e ≤ 32 mm: 40 pieces
122.1 (75 ≤ d ≤ 225 mm)	10 + 3 retained sample	-	32 mm < d_e ≤ 63 mm: 20 pieces
123.1 (250 ≤ d ≤ 630 mm)	10 + 3 retained sample	-	50 mm < d_e ≤ 110 mm: 10 pieces
124.1 (710 ≤ d ≤ 1000 mm)	10 + 3 retained sample	-	110 mm < d_e : 4 pieces

N 14 Tests and consequence in the event of deviations

If the requirements are not met, the causes must be checked and rectified and the test must be repeated. Basically, products which not met the specified requiremetns are to be rejected.

Internal pressure creep test: Provided the following requirements are met, the test verification required within the scope of certification scheme as well as in DIN 8061, DIN EN ISO 15493 is deemed to have been complied with.

The quality of the pipes must guarantee a shortfall probability of ≤ 0.0015 for the results of the internal pressure creep test under the conditions σ = 15 N/mm^2, ϑ = 60 °C, t ≥ 41.4 h. The shortfall probability is calculated against a lower tolerance limit of 5 h.

FPC test conditions: ϑ = 60 °C, σ = 15 N/mm^2 through to breaking point or max. 1000 h. The results have to be entered in a binomial network. On this binomial network (20% breakage among samples), the control limits with a confidence range of 99.73% are to be applied to the failure percentage determined in the cumulative frequency network determined under the aforementioned conditions.

Frequency of the FPC: Two pipe samples are to be taken after each extruder start-up, at least once a week. An internal pressure creep test is to be conducted on a pipe sample under test conditions of ϑ = 60 °C, σ = 15 N/mm^2 through to the point of breakage or for max. 1000 h. Verification ϑ = 60 °C, σ = 12,5 N/mm^2, t ≥ 1000 h is to be performed for each size of pipe manufactured every three years for factory production control purposes.

FPC conclusion: Approval can be given after an operating time of only 41.4 h. If a creep failure occurs at an operating time < 5 h, the production batch affected is to be rejected. If the creep failure is discovered between 5 and 41.4 h, the second pipe sample taken must achieve a minimum test period of t = 55 h under test conditions of ϑ = 60 °C, σ = 12.5 N/mm^2 (test pressure in accordance with DIN 8061/ DIN EN ISO 1452). If the upper control limit in the binomial network is exceeded, a negative, statistically secured deviation exists, the causes of which must be determined, possibly necessitating measures to be taken in production.

Test conditions AT: σ = 15 N/mm^2, ϑ = 60 °C;
Frequency AT: simultaneous on 5 pipe samples;
Conclusion AT: The evaluation is carried out by the follow-up smapling plan. Here are the characteristics used as a basis:

Number of samples	n = 5
Lower tolerance level	T_u = 5 h
Acceptance limit	P_o = 0,2 %
Rejection limit	P_1 = 5 %
Acceptance probability bei P_o	W_o = 0,90
Acceptance probability bei P_1	W_1 = 0,10
Standard deviation in the log. Decade	σ^* = 0,35

The test is deemed to have been passed if there are no incidences of creep failure within a joint period of 41.4 h during which the five pipe samples undergo testing. The test is deemed to have been failed if creep failure occurs within a joint period of 7.3 h during which the five pipe samples undergo testing. If a creep failure occurs between these two time limits, testing must be continued until such time as the following condition is met:

$$\lg t_{A1} = \frac{X_A - \Sigma \lg t_1}{n - b}$$

Es bedeuten:

t_{A1} Acceptance test period in h following the failure of the first test specimen
X_A Sum of the logarithms of the Acceptance test period = 8,085.
t_1 Test period of failed samples (b) in h.

If the acceptance test period is not met, the company must be asked to provide the three reserve samples from the associated sampling process, and they must be tested under conditions of σ = 12.5 N/mm^2, ϑ = 60 °C, for a minimum operating time of 55 h. No failures may occur here.
If the production batch also includes push-fit pipes, the internal pressure creep test is to be conducted, in accordance with the statistical model method shown above, once on smooth pipes and once on pipes with push-fit connections (five test specimens).

The requirement for external monitoring of fittings for internal pressure creep strength can be verified by conducting tests on one fitting per product group at a test pressure of 3.5 x PN. If an operating time of ≥ 100 h is achieved by the sample, the test is deemed to have been passed. If a creep failure of 100 h occurs, the internal pressure creep test must be repeated on a subsequent sample at a test pressure of 3.2 x PN for a period of 1000 h. A minimum operating time of ≥ 1000 h must be achieved here. Verification must be provided of a minimum operating time of ≥ 1000 h.

Table N 10 Dimensions and heights of fall of the falling weight

outside diameter d_n[mm]	SDR 11 bis SDR 21 (level of testing M)		SDR 26 to SDR 41 (level of testing H)	
	Molt [kg]	Height of fall [mm]	Molt [kg]	Height of fall [mm]
20	0,5	400	0,5	400
25		500		500
32		600		600
40		800		800
50		1000		1000
63	0,8	1000	0,8	1000
75		1000		1200
90		1200	1,0	2000
110	1,0	1600	1,6	2000
125	1,25	2000	2,5	2000
140	1,6	1800	3,2	1800
160		2000		2000
180	2,0	1800	4,0	1800
200		2000		2000
225	2,5	1800	5,0	1800
250		2000		2000
280	3,2	1800	6,3	1800
≥ 315		2000		2000

Impact strength (falling weight): During testing in accordance with DIN EN 744, the true impact rate (TIR) may not be any greater than 10 %. Refer to Table N 10 for the falling weight and height of fall. A falling weight of type d25 is to be used for falling weights of up to 0.8 kg, and type d90 is to be used for falling weights of 1 kg or more.

Impact bending test: The failure rate may not be any greater than 10% of the samples tested. Samples are taken from the pipes in a longitudinal direction. The samples are taken from the same section of pipe by machining, distributed as evenly as possible over the circumference of the pipe. They are not machined on the surface. The impact bending test in accordance with ISO 179 / ISO 9854 is performed on 10 samples albeit with the test parameters according to Table N 11 whereby the impact is exercised upon the outer surface of the sample. Testing is conducted at (23 ± 2) °C.

It serves to determine whether the samples break. If more than 10 % of the samples are broken during this test, the impact bending test must be repeated on 20 new samples from the same batch. The breakage quota for the first and second tests is assessed together.

Table N 11 Test parameters for the impact bending test

Pipe		**Samples**			**Pendulum impact mechanism energy**	**Spacing between thrust bearings**
outside diameter d_1 [mm]	Wall thickness s_1 [mm]	Length [mm]	Width [mm]	Height [mm]	[J]	[mm]
< 25	≙	(100 ± 2) mm long pipe section			15	$70^{+0,5}_{0}$
≥ 25	≤ 9,5	50 ± 1	6 ± 0,2	acc. to unmachined Wall thickness s_1	15	$40^{+0,5}_{0}$
> 25	> 9,5	120 ± 2	15 ± 0,5		50	$70^{+0,5}_{0}$

Annex O ZP 14.23.39 - Pressure pipes made from (PE) for alternativ installation techniques – PE 100-RC

(Edition: 27.04.2017)

O 1 Test and certification basics (also refer to section 2)

O 1.1 general prevailed basics

DIN 8074	Polyethylene (PE) - Pipes PE 80, PE 100 - Dimensions
DIN 8075	Polyethylene (PE) - Pipes PE 80, PE 100 - General quality requirements
PAS 1031	Material Polyethylene (PE) for the manufacture of pressure pipes and fittings - requirements and tests
PAS 1075	Pipes made from Polyethylene for alternative installation techniques - Dimensions, technical requirements and testing

O 1.2 alternativ prevailed basics

DIN EN 1555-2	Plastics piping systems for the supply of gaseous fuels- Polyethylene (PE) - Part 2: Pipes
DIN CEN/TS 1555-7	Plastics piping systems for the supply of gaseous fuels - Polyethylene (PE) - Part 7: Guidance for the assessment of conformity
DIN EN 12201-2	Plastics piping systems for water supply and for drainage and sewerage under pressure - Polyethylene (PE) - Part 2: Pipes
DIN CEN/TS 12201-7	Plastics piping systems for water supply and for drainage and sewerage under pressure - Polyethylene (PE) - Part 7: Guidance for the assessment of conformity
DIN EN ISO 15494	Plastics piping systems for industrial applications - Polybutene (PB), Polyethylene (PE), Polyethylen of raised temperature resistance (PE-RT), cross-linked Polyethylen (PE-X), Polypropylene (PP) - Metric series for specifictions for components and the system
ISO 4427-2	Plastics piping systems – Polyethylene - (PE)-Pipes and -fittings for water supply - Part 2: Pipes
ISO 4437-2	Plastic piping system for the supply of gaseous fuels - Polyethylene (PE) - Part 2: Pipes
KTW Guideline	Guideline for the hygienic assessment of organic materials in contact with drinking water (KTW guideline)

DVGW GW 335-A2 Plastics piping systems for gas and water distribution; Requirements and tests – Part A2: Pipes made of PE 80 and PE 100

Further alternative prevailed basics are to coordinate with DIN CERTCO.

Table O 1 Quality enhacement

Requierements	**Annex O ZP 14.23.39**	DIN 8074	DIN 8075	DIN EN 1555	DIN EN 12201	DVGW GW 335-A2	**Refer to:**
Participation in the Plastic Pipe Association (KRV) recycling system	**+**	-	-	-	-	-	Section 1.2
Materials must be listed as pipe or strip material in the KRV material lists	**+**	-	-	-	-	-	Annex N
Stress cracking test of raw material: > 8.760 h, bei 80° C, 4 N/mm^2, 2 % Arkopal N-100 (accelerated process permitted)	**+**	-	-	-	-	-	PAS 1075, Table 1a and 2
Stress cracking test of pipe: > 3.300 h, bei 80° C, 4 N/mm^2, 2% Arkopal N-100 (accelerated process permitted)	**+**	-	-	-	-	-	PAS 1075, Table 3 and 4
Point loading test on the solid wall pipe: 8.760 h, bei 80° C, 4 N/mm^2, 2% Arkopal N-100 (accelerated process permitted)	**+**	-	-	-	-	-	PAS 1075, Table 3 and 4
Thermal ageing test: > 100 years at 20° C	**+**	-	-	-	-	-	PAS 1075, Table 1a
Notch test on full walled piping: > 8.760 h bei 80° C (accelerated process permitted)	**+**	-	-	-	-	-	PAS 1075, Table 1a and 2
Penetration test: after 9.000 h remaining wall thickness ≥ 50 %	**+**	-	-	-	-	-	PAS 1075, Table 3
Protective layer scratch test: Penetration depth ≤ 75 % of Protective layer thickness	**+**	-	-	-	-	-	PAS 1075, Annex A6

O 2 General

Annex O (ZP 14.23.39) of this certification scheme applies to seamless pressure pipes made from PE 100-RC with a homogeneous as well as multi-layer wall structure for alternative installation techniques in the application areas TW, G, DA and AW, and in conjuction with sections 1 to 8 (main part), contains all the requiremets for awarding of the “DINplus” quality mark for plastic piping systems. The quality enhancement is summarised in Table O 1.

The certification in accordance with ZP 14.23.39 is an add-on certification for conformity with PAS 1075 and presupposes that the pressure pipe has already been certified in accordance with a basic standard.

Within the scope of the certification scheme, correlating test procedures are permissible (see also PAS 1075). The precondition for this is:
- Safeguarding the correlation of the test procedure, whereby the target variable (for instance, 8760 h) must be included. The correlation coefficient must be > 0.9. The minimum requirement is to be verified with a lower confidence limit of 2.5 %.
- Accreditation of the test laboratory and recognition by DIN CERTCO
- Recognition of the test procedure by DIN CERTCO

The minimum requirement in correlating test procedures is to be adapted regularly in line with current findings from existing test series. The current correlations have been submitted to DIN CERTCO. The minimum requirements for test procedures with a verified correlation independent of material type, as recognised by DIN CERTCO, are specified in the certification scheme.

O 3 Product groups

The Products groups (based upon DIN CEN/TS 1555-7, DIN CEN/TS 12201-7, DVGW GW 335-A2) are shown in Table O 2. Certificates are issued per product group, pipe construction (Typ 1 / 2 / 3), application field (DA / AW / TW / G) and production site if all requierements are met.

Table O 2 Product groups

Product group	Structural pipe design according to PAS 1075	Scope of application	Nominal diameter (DN/OD)
926.1	Typ 1 / 2 / 3	DA / AW / TW / G	d < 75 mm
926.2			75 mm ≤ d < 250 mm
926.3			250 mm ≤ d < 710 mm
926.4			710 mm ≤ d < 1800 mm
926.5			1800 mm ≤ d ≤ 2500 mm

O 4 Substance / materials used

The material used, i.e. polyethylene PE 100-RC, must conform to DIN 8075, PAS 1031, PAS 1075 and the relevant application standards (see O 1.2). The pipe manufacturer may only use types of materials for its pipes (mixtures, composite and stripped material) which are included or verified in the material lists published by the Plastic Pipe Industry Association (KRV) and for which type testing has been successfully completed in accordance with section 5.2.1 or supplementary testing in accordance with 5.2.2 of this certification scheme for each production centre through DIN CERTCO.

The composition of the granulate mixture for each approved pipe is to be submitted to DIN CERTCO. All the additives used must be distributed evenly. None of the additives on their own or in combination with other additives may have an adverse effect on the manufacture or weldability of the pipeline parts or impair the chemical, physical or mechanical properties specified in this standard.

Only granulate mixtures of the same MRS class or only RC materials (i.e. of the same material designation) may be mixed together. Conformity is to be confirmed.

Material types of the same material designation and the same MRS class, approved for the relevant production centre, may be combined in co-extrusion processes.

In composite pipes in which all the layers are made from PE, the outer layer is a signal layer if it does not exceed 10% of the rated wall thickness plus the tolerance associated with that wall thickness according to the standard. Pipes with a signal layer must be successfully type-tested. Type-testing will be used to assess the suitability of types of material, which have not been used before, for the base pipe. The suitability of types of materials, which have not been used before, for the signal layer will be assessed by means of a monitoring test during external monitoring.

New material is to be used for the manufacture of the pipes. The use of work-in-progress material of the same PE moulding compound from the pipe manufacturer's pressure pipe production process is permissible. Material which has been recovered from pipes with an adhesive, detachable layer may not be used. Recycled material from the base pipe with a detachable layer may be used. Recycled material from co-extruded pipes may only be used for co-extruded pipes which are not earmarked for the transport of drinking water or gas. Furthermore, the material must satisfy all requirements.

PE 100-RC layers may only be used with PE 100-RC. Reclaimed material, regenerated material and recycled material may not be used.

Compliance with the material requirements specified in this certification scheme must be stipulated to the raw material supplier when the order is placed, and this must be ensured by an acceptance test certificate 3.1 in accordance with DIN EN 10204 for each delivery.

O 5 Manufacture

The manufacturing process of pipes and fittings must ensure uniform and reproducible production conditions and be documented as per the factory regulations of the piping manufacturer.

The correlation between the test batch and the date of manufacture must be established by factory records. The types of materials used must be entered in these records.

The extruder settings must be monitored; the main parameters must be recorded.

O 6 Dimensions

Prevailing basic standards will apply to the dimensions of the pipes.

O 7 Delivery form, Packaging, Transport, Storage

The pipes are supplied in straight lengths, as coiled bundles and drum goods.

O 8 Processing and laying guidelines

The pipe manufacturer is required to issue supplementary information about installation action and instructions which go over and beyond the specifications of the DIN standards, DVGW worksheets and KRV installation instructions.

O 9 Minimum marking

All the pipes are to be marked continuously and permanently (embossing/laser) - at intervals of about 1 m - with the minimum information indicated in Table O 3.

Table O 3 Minimum marking of the pipes

Designation	Sample marking
Name and/or trademark of the manufacturer	xyz
Quality mark for plastic pipes with a register number for alternative laying techniques together with PE 100-RC designation	PE 100 RC P1Rxxxx
KRV trademark (provided desirable)	1)
Typ acc. to PAS 1075	Type 1
other Designation according to the basic standard	
1) observing licensing rights	

O 10 Raw material manufacturer´s material tests

The material tests (TT, BRT/PVT, AT) from raw material producer are grouped in Table O 4.

Table O 4 Tests by raw material manufacturer (per moulding compound)

Property	Require-ments for	Requirement (Parameter)	Type test (TT)		Factory production Control (WPC)		Monitoring assessment (AT)
			Initial type tes-ting (ITT)	Samples	(BRT/ PVT)	Samples	
Density	PAS 1075	≥945 kg/m³ (23 °C)	X		X		min. 1x / half-year [1)]
MFR Melt Flow Rate	PAS 1075	0,2-0,4 g/10min ± 20 % (5 kg;190 °C)	X		X		min. 1x / half-year [1)]
Tensile creep test	PAS 1075	FNCT at 6 Samples > 8 760 h at 80 °C, 4 N/mm², 2 % Arkopal N-100 (raw material); or by correlated testing procedure	X	Samples from the same orientation-free processing procedure (e.g. press plate)	1x / batch	Samples from the same orientation-free processing procedure (e.g. press plate)	-
Thermal ageing test	PAS 1075	Verification > 100 years at 20 °C Testing at elevated temperature for determanation of activation energy	X	coiled bundles 10m Da 32 SDR 11	-		-
Point loading test on solid wall pipe	PAS 1075	3 Samples > 8 760 h at 80 °C, 4 N/mm², 2 % Arkopal N-100; or by correlated testing procedure	X	4 pipes Da 110 SDR 11 á 1200 mm	-		every 3 years, if no irregulatiry is observed [2)]
Notch test (DIN EN ISO 13479)	PAS 1075	NPT > 8 760 h or by correlated testing procedure	X	3 pipes Da 110 SDR 11 á 1200 mm	-		min. 1x / 3 years, if no irregulatiry is observed [2)]

[1)] The sampling are taken twice per year from the pipe manufacturer („hopper sample“)
[2)] The test is conducted on 1 pipe sample (Da 110 SDR 11 á 1200 mm). The samples are provided by the raw material manufacturer.

Minimum requirements for correlating test procedures (tests raw material manufacturer):

– Stress cracking test (FNCT > 8760 h; 80°C; 4 N/mm²; 2% Arkopal N-100; orientation-free processing procedure):
  400 h in ACT test procedure (90°C; 4 N/mm²; 2% NM5) [D-PL-11080-01-00; PA FNCT 2.1-3 in conjuction with PA ACT 2.1-9]
  400 h in 2NCT+ test procedure (90°C; 4 N/mm²; 2% NM5) [D-PL-11080-01-00; PA 2NCT 2.1-2 in conjuction with PA ACT 2.1-9
  Alternativ:
  150 h ACT+ testing (90°; 5 N/mm²; 2 % NM5) on 2 additional samples
  400 h ACT testing (90°; 4 N/mm²; 2 % NM5) on 2 samples [D-PL-11080-01-00; PA FNCT 2.1-3 in conjunction with PA ACT 2.1-9]
  Batch release after the ACT+ requirement has been met

– Point loading test (PLT > 8760 h; 80°C; 4 N/mm²; 2% Arkopal N-100; full wall pipe Da 110 SDR 11):
  450 h in PLT+ test procedure (90°C; 4 N/mm²; 2% NM5) [D-PL-11080-01-00; PA PLP+ 2.2-4]

O 11 Pipe manufacturer´s material test

The pipes manufacturer tests for the initial type testing (ITT) are grouped on table O 5.

The pipes manufacturer tests for the type test (TT, change of moulding compound) are grouped on table O 6.
The pipe manufacturer tests for the external monitoring (AT) are grouped on table O 7a to O 7c

Table O 5 Tests by pipe manufacturer (per moulding compound) – Initial type testing (ITT)

Property	Requi-re-ments for	Requirements (Parameter)	Type test (per molding compound)	Typ 1	Typ 2	Typ 3	Sampling
Stress crack-ing test	PAS 1075	FNCT > 3300 h at 80 °C, 4 N/mm², 2 % Arkopal N-100 or by correlated stress crack-test procedure [1)]	FNCT resp. 2NCT on 3 samples of one pipe Da 110, SDR 11 + FNCT resp. 2NCT on 3 samples of one pipe with smallest (applied) wall thickness + FNCT resp. 2NCT on 3 samples of one pipe with largest (applied) wall thickness	X	X	X	1 pipe Da 110 SDR11 á 200 mm + 1 pipe of smallest (applied) wall thick-ness á 200 mm + 1 pipe-segment of largest (applied) wall thickness á 250x250mm
Point loading test	PAS 1075	PLT > 8760 h bei 80 °C,4 N/mm², 2% Arkopal N-100 or by correlated point load test procedure [1)]	PLT on pipes DA 110, SDR 11 on each 3 separate samples in standard-testing or each 2 samples in the accalerated test[1)] + each 2 samples in standard testing	X	X	X	4 pipes Da 110 SDR 11 á 1200 mm
Penetration test	PAS 1075	Remaining wall thickness after 9000 h at 20°C > 50 % of the original wall thickness [1)] (only for Berstlining application)	Testing conditions as per MAC concept taking into account the stress cracking resistance and the thermal aging (DVS 2203-4 Suplementary sheet 3)	X	X	X	3 pipes Da 110 SDR 11 á 1200 mm
Polyolefin pro-tective layer scratch test	PAS 1075	Penetration depth < 75 % of the protective layer thickness [1)]	on 1 separate sample per EG	-	-	X	1 pipe per EG (Da optional) á 1200 mm

[1)] Approval criterion

If the approval also covers product group 926.1 (d <75 mm), the above-mentioned stress crack test (FNCT resp. 2NCT or ACT resp. 2NCT) on 3 samples from a tube of the smallest (applied) wall thickness shall not be performed. Instead, in this case, as a substitute additionally to the above mentioned tests, a point load test (PLT or PLT+) is to be performed to pipes of the smallest (applied) wall thickness (3 individual samples in the standard test, resp. each 2 in the accelerated test [1)] + each 2 in the standard test). For this purpose, additionally 4 tubes of the smallest (applied) wall thickness á 1200 mm are to be sampled.

If the approval does not include tubes of nominal diameter 110 mm, the above-mentioned stress crack-, point load- and penetration-tests on tubes Da 110 SDR 11 are to be performed on tubes of the next smaller or larger nominal diameter, included in the approval.

If contradictory results are obtained in the stress cracking test (FNCT resp. 2NCT or ACT resp. 2NCT+) on the one hand and in the point load test (PLT or PLT+) on the other hand, the results of the point load test (PLT or PLT+) are decisive for the assessment of the alternative installation technique.

Table O 6 Tests by pipe manufacturer (per moulding compound) - Supplementary testing (TT, change of moulding compound)

Property	Requi-remetn s for	Requirements (Parameter)	Supplementary testing (per moulding compound)	Typ			Sampling
				1	2	3	
Stress crack-ing test	PAS 1075	FNCT > 3300 h at 80 °C, 4 N/mm², 2 % Arkopal N-100 or by correlated stress crack-test procedure [1)]	FNCT or 2NCT on 3 samples of one pipe Da 110, SDR 11 + FNCT or 2NCT on 3 samples of one pipe with small-est (applied) wall thickness + FNCT or 2NCT on 3 samples of one pipe with largest (applied) wall thickness	X	X	X	1 pipe Da 110 SDR11 á 200 mm + 1 pipe of smallest (applied) wall thick-ness á 200 mm + 1 pipe-segment of largest (applied) wall thickness á 250x250mm
Point loading test	PAS 1075	PLT > 8760 h bei 80 °C, 4 N/mm², 2% Arkopal N-100 or by correlated point load test procedure [1)]	PLT on pipes DA 110, SDR 11 on each 3 separate samples in standard-testing or each 2 samples in the accalerated test[1)] + each 2 samples in standard testing	X	X	X	4 pipes Da 110 SDR 11 á 1200 mm
Polyolefin pro-tective layer scratch test	PAS 1075	Penetration depth < 75 % of the protective layer thickness [1)]	on 1 separate sample per EG	-	-	X	1 pipe per EG (Da optional) á 1200 mm

[1)] Approval criterion

If the approval also covers product group 926.1 (d <75 mm), the above-mentioned stress crack test (FNCT resp. 2NCT or ACT resp. 2NCT) on 3 samples from a tube of the smallest (applied) wall thickness shall not be performed. Instead, in this case, as a substitute additionally to the above mentioned tests, a point load test (PLT or PLT+) is to be performed to pipes of the smallest (applied) wall thickness (3 individual samples in the standard test, resp. each 2 in the accelerated test [1)] + each 2 in the standard test). For this purpose, additionally 4 tubes of the smallest (applied) wall thickness á 1200 mm are to be sampled.

If the approval does not include tubes of nominal diameter 110 mm, the above-mentioned stress crack-, point load- and penetration-tests on tubes Da 110 SDR 11 are to be performed on on tubes of the next smaller or larger nominal diameter, included in the approva.l

If contradictory results are obtained in the stress cracking test (FNCT resp. 2NCT or ACT resp. 2NCT+) on the one hand and in the point load test (PLT or PLT+) on the other hand, the results of the point load test (PLT or PLT+) are decisive for the assessment of the alternative installation technique.

Table O 7a Tests pipe manufacturer (per moulding compound) – External monitoring (AT) - product group 926.1 (d < 75 mm)

Property	Requi-remetns for	Requirements (Parameter)	External monitoring (per moulding compound) EG 926.1					Sampling
			Frequency [1)]	Samples	Typ			
					1	2	3	
Point loading test	PAS 1075	PLT > 8760 h bei 80 °C,4 N/mm², 2% Arkopal N-100 or by correlated point load test procedure	1x / PS / half-year (after 2 consecutive positive results 1x / PS / year)	PLT on 1 separate sample optionally in the standard test or in the accelerated test	X	X	X	1 pipe sample á 1200 mm
Polyolefin pro-tective layer scratch test	PAS 1075	Penetration depth < 75 % of the protective layer thickness	1x / PS / 3 years	on 1 separate sample	-	-	X	1 pipe sample á 1200 mm

[1)] For abbreviations see section 3; PS – Production plant

If contradictory results are obtained in the stress cracking test (FNCT resp. 2NCT or ACT resp. 2NCT+) on the one hand and in the point load test (PLT or PLT+) on the other hand, the results of the point load test (PLT or PLT+) are decisive for the assessment of the alternative installation technique.

Table O 7b Tests by pipe manufacturer (per moulding compound) - External monitoring (AT) - product group 926.2 (75 ≤ d < 250 mm)

Property	Requi-remetn s for	Requirements (Parameter)	External monitoring (per moulding compound) EG 926.2					Sampling
			Frequency [1)]	Samples	Typ			
					1	2	3	
Stress crack-ing test	PAS 1075	FNCT > 3300 h at 80 °C, 4 N/mm², 2 % Arkopal N-100 or by correlated stress crack-test procedure	1x / PS / half-year (but at least once per year per product group)	FNCT resp. 2NCT on 3 sepa-rate samples extracted from one pipe	X	X	X	1 pipe sample á 200 mm
Point loading test	PAS 1075	PLT > 8760 h bei 80 °C, 4 N/mm², 2% Arkopal N-100 or by correlated point load test procedure	1x / PS / year	PLT on 1 separate sample optionally in the standard test or in the accelerated test	X	X	X	1 pipe sample á 1200 mm
Polyolefin pro-tective layer scratch test	PAS 1075	Penetration depth < 75 % of the protective layer thickness	1x / PS / 3 years	on 1 separate sample	-	-	X	1 pipe sample á 1200 mm

[1)] For abbreviations see section 3; PS – Production plant

If contradictory results are obtained in the stress cracking test (FNCT resp. 2NCT or ACT resp. 2NCT+) on the one hand and in the point load test (PLT or PLT+) on the other hand, the results of the point load test (PLT or PLT+) are decisive for the assessment of the alternative installation technique.

Table O 7c Tests by pipe manufacturer (per moulding compound) - External monitoring (AT) - product group 926.3 / 926.4 / 926.5

Property	Requi-remetn s for	Requirements (Parameter)	External monitoring (per moulding compound) EG 926.3/.4/.5					Sampling
			Frequency [1)]	Samples	Typ			
					1	2	3	
Stress crack-ing test	PAS 1075	FNCT > 3300 h at 80 °C, 4 N/mm², 2 % Arkopal N-100 or by correlated stress crack-test procedure	1x / PS / half-year (but at least once per year per product group)	FNCT resp. 2NCT on 3 sepa-rate samples extracted from one pipe	X	X	X	1 pipe sample á 200 mm
Point loading test	PAS 1075	PLT > 8760 h at 80 °C,4 N/mm², 2% Arkopal N-100 or by correlated point load test procedure	1x / PS / 3 years	PLT on 1 separate sample optionally in the standard test or in the accelerated test	X	X	X	1 pipe sample á 1200 mm
Polyolefin pro-tective layer scratch test	PAS 1075	Penetration depth < 75 % of the protective layer thickness	1x / PS / 3 years	on 1 separate sample	-	-	X	1 pipe sample á 1200 mm

[1)] For abbreviations see section 3; PS – Production plant

If contradictory results are obtained in the stress cracking test (FNCT or 2NCT or ACT or 2NCT+) on the one hand and in the point load test (PLT or PLT+) on the other hand, the results of the point load test (PLT or PLT+) are decisive for the assessment of the alternative installation technique.

Minimum requirements correlating test procedures (tests pipe manufacturer):

– Stress cracking test (FNCT > 3300 h; 80 °C; 4 N/mm²; 2 % Arkopal; pipe sample):
  195 h in ACT test procedure (90 °C; 4 N/mm²; 2 % NM5) [D-PL-11080-01-00; PA FNCT 2.1-3 in conjuction with PA ACT 2.1-9]
  195 h in 2NCT+ test procedure (90 °C; 4 N/mm²; 2 % NM5) [D-PL-11080-01-00; PA 2NCT 2.1-2 in conjuction with PA ACT 2.1-9]

– Point loading test (PLT > 8760 h; 80 °C; 4 N/mm²; 2 % Arkopal; pipe sample):
  450 h in PLT+ test procedure (90 °C; 4 N/mm²; 2 % NM5) [D-PL-11080-01-00; PA PLP+ 2.2-4]

O 12 Number of samples

The number of samples to be taken for the initial inspection per moulding compound (ITT; raw material manufacturer) is grouped on Table O 4.

The number of samples to be taken for the FPC per moulding compound (BRT/PVT; raw material manufacturer) is shown on Table O 4.

The number of samples to be taken for the external monitoring per moulding compound (AT; raw material manufacturer) is shown on Table O 4.

The number of samples to be taken for the initial inspection per moulding compound (ITT; pipe manufacturer) is shown in Table O 5.

The number of samples to be taken for the supplementary inspection per moulding compound (TT; pipe manufacturer) is shown on Table O 6.

The number of samples to be taken for the external monitoring per moulding compound and product group (AT; pipe manufacturer) is shown on Table O 7a to Table O 7c.

O 13 Tests and consequence in the event of deviations

If the requirements are not meet, the causes must be checked and rectified and the test must be repeated. Basically, products which not meet the specified requirements are to be rejected.

The defect must be rectified within a period of 6 weeks. The action taken to rectify the defect must be described in writing to DIN CERTCO. After rectifying the defect, a further sampling is performed by DIN CERTCO. Shows the performed re-sitting exams a new discrepancy, the certificate will initially be suspended and the manufacturer will be given an opportunity to improve its production processes. A new discrepancy leads to the final withdrawal of the certificate.

O 14 Operating pressure at berst lining

For type 1 pipes [made of polyethylene with increased stress cracking resistance (PE 100 RC)] and of type 2 [with dimensionally integrated protective layers made of polyethylene with increased resistance to stress cracking (PE 100 RC)], the operating pressure at burst lining is to be restricted to max. 5 bar for SDR 11 and max. 3.2 bar for SDR 17.

Annex P ZP 24.26.45 - Material plasticizer-free polyamide (PA-U) for the production of high pressure pipes and fittings in the gas supply

(Edition: 27.04.2017)

P 1 Test and certification basics (also refer to section 2)

DIN ISO 16486-1 Plastic piping systems for the supply of gaseous fuels - Unplasticised polyamide (PA-U) piping system with fusion jointing and mechanical jointing – Part 1: General

DIN ISO 16486-2 Plastic piping systems for the supply of gaseous fuels - Unplasticized polyamide (PA-U) piping systems with fusion jointing and mechanical jointing – Part 2: Pipes

DIN ISO 16486-3 Plastic piping systems for the supply of gaseous fuels - Unplasticized polyamide (PA-U) piping systems with fusion jointing and mechanical jointing - Part 3: Fittings

DVGW GW 335-A6 Plastic Piping Systems in Gas and Water Supply - Requirements and Tests - Part A6 - PA-U 160 and PA-U 180 Pipes and their Joints and Jointing

Table P 1 Quality enhancement

Requierements	Appendix P ZP 24.26.45	DIN ISO 16486-1	DVGW GW 335-A6	Refer to:
Daily updated puplication of certified materials	X	-	-	P3
Certificate according to DIN EN 10204 for each delivery	X	-	X	P2
Third party testing of density	X	-	X	Table P3
Third party testing of viscosity number	**X**	-	X	Table P3
Third party testing of DSC	**X**	-	X	Table P3
Third party testing of moisture content	**X**	-	-	Table P3
Third party testing of carbon black content	**X**	-	-	Table P3
Third party testing of pigment and carbon black	**X**	-	-	Table P3

Third party testing of rapid crack propagation	**X**	-	X	Table P3
Third party testing of slow crack growth	**X**	-	X	Table P3

P 2 General

Annex P (ZP 24.26.45) of this certification scheme applies for all moulding compounds (pipe and strip materials) of the material group plasticizer-free polyamide (PA-U) for the production of high-pressure pipes and fittings in the gas supply according to DIN EN 1874-1 resp. DIN ISO 16486-1, and in conjunction with the sections 1 to 7 (main part) contains all the requiremets for awarding of the “DINplus” quality mark for plastic piping systems. The quality enhancement is summarised in Table P 1.

The proof of long term strength (creep internal pressure behaviour) must be carried out according to the procedure defined in DIN EN ISO 9080. The internal pressure creep curves determined in this way may not be below the reference characteristics (minimum curves) specified in DIN ISO 16486-1 at any point. For 20°C and 50 years, the respective LCL value must correspond to the appropriate reference value of DIN ISO 16486-1, Table 3. The raw material manufacturer must ensure, that verification of long-term stability for the material used is submitted to DIN CERTCO.

Compliance with the material requirements specified in this certification scheme must be confirmed to the customer by a certificate according to DIN EN 10204 in accordance with the requirements of DVGW GW 335-A6, Table 2 for each delivery.

P 3 Product groups

Each molding compound (pipe and strip materials) requires a separate approval.

Prerequesition for approval is, in addition to the Initial Type Test, the conclusion of a monitoring contract between the raw materials manufacturer, DIN CERTCO, a testing laboratory, recognized by DIN CERTCO and the Kunststoffrohrverband (KRV). Thus the raw material manufacturer commits to a regular factory production control (BRT / PVT) and to implement regular surveillance tests (AT) in accordance with the Tables P3 and P4.

All DIN CERTCO zugelassenen moulding compounds (pipe- and stripmaterials) will be released on the DIN CERTCO homepage www.dincertco.de which is updated on a daily basis. Thus they meet the requirements to be included in the list of materials of the Kunststoff-rohrverband www.krv.de

Table P 3 Product groups / Material list (example)

Manufacturer / Material type	Material-designation	Colour	Weathering proof 7 GJ/m²	Proven Rapid Crack Propagation (RCP) S4- or FS-test 2)				Application			
				Application also for pipes ≥ 32 mm wall thickness			Application for pipes up to .. mm wall thickness				
				DA	TW	AW	G	DA	G	TW	AW
Name of material manufacturer											
Name of moulding material chosen by the manufacturer	PA-U 12 180	…	-	-	-	-	…..	-	X	-	-

P 4 Material testing by manufacturer

The material tests (TT, BRT/PVT, AT) by the raw material manufacturer are summarized in Table P 4

Table P 4 Material test manufacturer (per moulding compound)

Property	Requirements for	Requirement (Parameter)	Type test (TT) Initial type testing (ITT)	Internal monitoring FPC (BRT/ PVT)	External monitoring (AT)
Proof of long term strength (creep internal pressure behaviour)	ISO 9080	DIN ISO 16486-1 clause 5.4	X	-	-
Colour	DVGW GW 335-A6	DVGW GW 335-A6 clause 3.2	X	per batch	at least. 1x / half year
Density	ISO 1183-1, ISO 1183-2	PA-U 11: 1020 to 1050 kg/m³ at 23 °C PA-U 12: 1000 to 1040 kg/m³ at 23 °C	X	per batch	at least. 1x / half year
Dry loss: volatile matter or moisture content	ISO 15512, Verfahren B	≤ 0,10 %	X	per batch	-
Solution viscosityt / viscosity number	ISO 307	≥ 180 ml/g / solventl m-Cresol	X	per batch	at least. 1x / half year
DSC	DVGW GW 335-A6	DVGW GW 335-A6 clause 3.6	X	per batch	at least. 1x / half year
Weather resistance (for black and yellow moulding compounds)	ISO 16871	≥ 3,5 GJ/m²	X	-	-

Property	Requirements for	Requirement (Parameter)	Type test (TT) Initial type testing (ITT)	Internal monitoring FPC (BRT/ PVT)	External monitoring (AT)
Carbon black content (only black moulding compounds)	ISO 6964	0,5 bis 1,0 % (mass percentage)	X	per batch	at least. 1x / half year
Dispersion of pigments oder carbon black (black and yellow moulding compounds)	DIN ISO 16486-1	DIN ISO 16486-1 appendix A.3	X	per batch	at least. 1x / half year
Rapid crack propagation (fieldtest, full-scale-testing)	ISO 13478	at $e \geq 5$ mm $p_c \geq 1{,}5$ MOP at 0° C	X	-	-
Rapid crack propagation (Laboratory test, S4-testing)	ISO 13477	g at 0 °C	-	-	at least. 1x / half year
Slow crack growth	ISO 13479	≥ 500 h at 80 °C, d_n 110 or 125 mm, SDR 11 PA-U 11/12 160: 18 bar PA-U 11/12 180: 20 bar	X	-	at least. 1x / half year
Welding strength	DVS 2207-16	$f_s \geq 0{,}8$	X	-	-
Resistance to chemicals / chemical resistancet	DIN ISO 16486-1	DIN ISO 16486-1 appendix B Kerosin Type Jet A1	X	-	-
Longitudinal shrinkage	ISO 2505	≤ 3 % at 150 °C	X	-	at least. 1x / half year
Charpy impact strength	ISO 179-1/1eA	$a_{cN} \geq 10$ kJ/m^2 at 0 °C	X	-	at least. 1x / half year

Annex Q ZP 9.27.47 Multilayer composite plastic pipes made from polyethylene (PE) with PE intermediate glass fibre layer for high pressure applications

(Edition 09.07.2020)

Q 1 Inspection and certification principles (also refer to section 2):

DIN 8074	Polyethylene (PE) pipes - PE 80, PE 100 - Dimensions
DIN 8075	Polyethylene (PE) pipes - PE 80, PE 100 - General quality specifications
PAS 1031	Polyethylene (PE) as a material for the manufacture of pressure pipes and fittings; PAS1031
ZP 14.23.39	Annex O: Polyethylene pipes for alternative laying techniques
DIN EN ISO 15494	Plastic piping systems for industrial applications - Polybutylene (PB), polyethylene (PE), polyethylene of raised temperature resistance (PE-RT), crosslinked polyethylene (PE-X) and polypropylene (PP) – Metric series for specifications for components and the systems
DIN EN 1555-1	Plastic piping systems for the supply of gaseous fuels - Polyethylene (PE) - Part 1: General
DIN EN 1555-2	Plastic piping systems for the supply of gaseous fuels - Polyethylene (PE) - Part 2: Pipes
DIN EN 1555-5	Plastic piping systems for the supply of gaseous fuels - Polyethylene (PE) - Part 5: Fitness for purpose of the system
DIN CEN/TS 1555-7	Plastic piping systems for the supply of gaseous fuels - Polyethylene (PE) - Part 7: Guidance for the assessment of conformity
DIN EN 12201-1	Plastic piping systems for water supply, and for drainage and sewerage under pressure - Polyethylene (PE) - Part 1: General
DIN EN 12201-2	Plastic piping systems for water supply, and for drainage and sewerage under pressure - Polyethylene (PE) - Part 2: Pipes
DIN EN 12201-5	Plastic piping systems for water supply, and for drainage and sewerage under pressure - Polyethylene (PE) - Part 5: Fitness for purpose of the system
FprCEN/TS 12201-7	Plastic piping systems for water supply, and for drainage and sewerage under pressure - Polyethylene (PE) - Part 7: Guidance for the assessment of conformity

ISO/TS 18226	Plastics pipes and fittings — Reinforced thermoplastics pipe systems for the supply of gaseous fuels for pressures up to 4 MPa (40 bar)
DIN EN 10204	Metallic products - Types of inspection documents
KTW-BWGL	Basis for assessment of plastic and other organic materials in contact with drinking water

Q 2 General

Annex Q (ZP 9.12.47) of this certification scheme applies to pressure pipes and fittings made from PE 80, PE 100 or PE 100-RC for the supply of gaseous fuels for pressures up to 16 bar and for drinking water for pressures up to 30 bar with PE intermediate glass fibre layer, in association with sections 1 to 8, contains all the requirements for the award of the "DIN*plus*" quality mark for plastic piping systems. The quality enhancement is summarised in Table Q 1.

Table Q 1 Quality enhancement

Requirements	ZP 9.27.47	DIN 8074	DIN 8075	DIN EN 1555/ DIN EN 12201	ISO/TS 18226	**Refer to:**
Participation in the Plastic Pipe Association (KRV) recycling system	+	-	-	-	-	Section 1.2
Materials must be listed as pipe or strip material in the KRV material lists	+	-	-	-	-	Annex Q
Enhanced long term hydrostatic strength MRS	+	-	-	MRS = 8 resp. 10 MPa	-	Annex Q

Q 3 (Product groups) - Product families (PF)

Instead of product groups, **Product families** (PF) and Product variants will be defined as follows (based upon ISO TS-18226 Annex E 1.2). Certificates are issued per product family/application/product type if all requirements are met.

RTP products shall be divided into product families. Each family shall have a representative named the **Product-family representative**. The product-family representative shall have an inner diameter of at least 75 mm.
Other products within the family are termed “product variants”.
A product family is a range of RTP product variants having the same regression-line slope. Product family members should have the following features in common:

- General design. Changes in the diametric dimensions of the RTP pipe body are allowed. However, changes to the internal diameter shall be within the range, − 40 mm to + 60 mm, of the qualified product.
- Winding angle (within ± 1°).
- The same number of reinforcing layers.
- Grades of thermoplastics in the liner and reinforcing layer (if any).
- Reinforcement. For fibre reinforcements, this implies the same fibre grade, yarn and cord architecture, or weave architecture if woven. For cords, the cord spacing and area density of reinforcement may be changed by ± 15 %. Where the reinforcement is in the form of tape, the tape width may be changed, provided the other features remain the same.

Q 4 Substance / Raw materials used

The composite plastic pipes made from PE, with a PE-intermediate glass fibre layer, consist of three concentric layers.

- a thermoplastic liner, the main function of which is to contain the fluid being transmitted
- an even number of balanced helical windings of continuous reinforcement, to resist the applied pressure and other loads
- an outer protective thermoplastics cover

The middle layer is made from fibre glass in a PE-matrix whereby the minimum content of glass fibre is 60% weight percent
The PE-matrix material of intermediate Layer has to conform to DIN 8075 (at least MFR range / OIT).
The inner layer (layer in contact with fluid being conducted) and the outer layer (layer in contact with outer environment) consist of PE 80, PE 100 or PE 100-RC must conform to DIN 8075. Furthermore, the material PE 100-RC must conform to annex O of this certification scheme.

The pipe manufacturer may only make pipes from types of materials (mixtures, layered material, strip material) which are listed or verified in the KRV material lists and for which it has passed a type test in accordance with section 5.2.1 or a supplementary test in accordance with 5.2.2 of this certification scheme via DIN CERTCO for each production site.

The composition of the granulate mixture for the approved pipe is to be submitted to DIN CERTCO for filing. All the additives used must be distributed evenly. None of the additives may adversely affect the manufacture or weldability of the pipeline parts either on their own or with other additives, nor may they compromise the chemical, physical or mechanical properties specified in this standard.

Only granulate mixtures of the same MRS class or only RC materials (i.e. same material designation) may be mixed. The pipe manufacturer must confirm that it does not object to this.

Virgin material is to be used for the manufacture of the pipes. The use of work-in-progress material from the same PE moulding compound is permissible.

Reclaimed and recycled material may not be used.

Q 5 Dimensions

For the outer diameter and the total wall thickness of pipes DIN 8074 has to be applied.
For wall thickness of outer-, middle- and inner layer of pipes, the respective factory standard (in its current versions) has to be applied. It has to be approved by DIN CERTCO and has to be recorded there.

The wall thickness of the outer layer has to be ≥ 25% of total wall thickness.

The thickness of the individual layers of the cross-section of the pipe is determined using a measuring microscope. Other appropriate processes are permissible. The outside diameter is determined using a circometer.

The out-of-roundness is determined as the difference between the measured maximum and minimum outside diameters of the same cross-section at 0.1 mm. The check is to be performed immediately after production.

Q 6 Delivery form

The pipes are supplied in straight lengths, as coiled bundles and drum goods. The design length is to be specified by the manufacturer.

Q 7 Processing, laying guidelines and required manufacturer declarations

Laying: The pipe manufacturer is required to issue supplementary information about laying in the case of laying measures which go over and beyond the specifications of the DIN standards, DVGW worksheets and KRV laying instructions.

Internal and external wear and erosion: RTP shall be treated with respect to wear and erosion, in the same way as the non-reinforced thermoplastics pipes manufactured from the same type of polymer. It is important that, should pigging operations be required, soft pigs shall be used.

Gas diffusion: The manufacturer shall provide information relating to the rate of gas diffusion through the liner wall at the system design pressure and temperature, which shall include the permeation coefficient (as a function of temperature) of the liner material (and outer cover, if different), and the volume flow rate of gas through inner liner and outer cover per unit length of pipe. The manufacturer shall demonstrate that the design of the RTP pipe body and fittings is such that diffused volatiles do not build up in the reinforcing layer to a level that could result in damage.

Minimum bend radius: The manufacturer shall quote the recommended storage bend radius of the pipe. Service bend radii in excess of 25 times the pipe body internal diameter are permissible and require no special qualification. Smaller bend radii are a special issue and require testing to establish a de-rating factor.

Q 8 Minimum marking

All the pipes are to be marked continuously and permanently (embossing/laser) - at intervals of about 1 m - with the minimum information indicated in Table Q 2.
Pipes which conform to the KTW-BWGL directive can be marked with the application designation "TW" (to indicate that they are suitable for drinking water).

Table Q 2 Minimum marking of the pipes

Designation	Sample marking
Name and/or trademark of the manufacturer	xyz
Quality mark for plastic pipes with a register number	P1R0000
KRV trademark	[1]
Product standard	EN ISO 15494, ISO/TS 18226
Product identification code	
Material and designation	PE / GF / PE
Nominal outer diameter d_n	110
Nominal wall thickness e_n or SDR series or pipe series S or nominal pressure PN	10 SDR 11 PN 10
Intended use	G/TW/AW/DA
Manufacturer's details (by name or encrypted) Production period (year + month) Production centre (if there are more than one)	 11/2012 Berlin

[1] observing licensing rights

Q 9 Material/goods inward check

The material tests (TT, BRT/PVT, AT) are grouped in Table Q 3.

Table Q 3 Material test (per moulding compound)

Property	Require-ments for	Requirement (Parameter)	Type test (TT)	Internal monitoring (BRT/PVT)		External monitoring (AT)
			Initial type testing (ITT)	Test confirmation (according to DIN EN 10204)	Spot checks	
Liner-/Cover material						
Classification / MRS value (Verific. of long-term strength)	PAS 1031 ISO 15494	above the reference characteristic; MRS (20°/50J) ISO9080/ISO12162: PE 80 ≥ 8 MPa; PE 100 ≥ 10 MPa	The materi-als are type-tested by the material manufacturer	Factory confirmation 2.1		The materials undergo monitoring tests by the material manufacturer. Sampling can take place at the pipe manufacturer ("funnel sample")
Density	PAS 1031 ISO 15494	≥ 930 kg/m³ (23 °C)		Acceptance test certificate 3.1		
Colour	PAS 1031 ISO 15494	consistent; preferably black		Factory confirmation 2.1		
Weight loss: volatile constituents or moisture content [a]	PAS 1031 ISO 15494	≤ 350 mg/kg ≤ 300 mg/kg		Acceptance test certificate 3.1	X	
MFR melt flow index	PAS 1031 ISO 15494	0.2-1.4 g/10 min ± 20 % (5 kg;190 °C)		Acceptance test certificate 3.1	X	
Thermal stability (OIT)	PAS 1031 ISO 15494	≥ 20min (200 °C;15 ± 2 mg; O2)		Acceptance test certificate 3.1		
Homogeneity (carbon black dispersion)	PAS 1031 ISO 15494	≤ grade 3; Cl. A1,A2,A3,B		Factory certificate 2.2		
Homogeneity (pigment disp.)	PAS 1031 ISO 15494	≤ grade 3; Cl. A1,A2,A3,B		Factory certificate 2.2		
Resistance to slow crack growth (SCG) [b]	PAS 1031 ISO 15494	no failure (d_n 110; SDR11; 80 °C; 500 h; water/water 8,0 / 9, 2 bar)		Factory confirmation 2.1		
Resistance to rapid crack propagation (RCP) [b]	PAS 1031 ISO 15494	no failure (d_n 110;SDR11; Tmin,op. °C; air; p_c >1.5 PN)		Factory confirmation 2.1		
Weathering resistance (WB), black mat.: carbon black con-tent [b]	PAS 1031 ISO 15494	2-2.5 % by weight		Factory certificate 2.2		

Property		Require-ments for	Requirement (Parameter)	Type test (TT) / Initial type testing (ITT)	Internal monitoring (BRT/PVT)		External monitoring (AT)
					Test confirmation (according to DIN EN 10204)	Spot checks	
Weathering resistance coloured material (after weathering ≥ 3.5 GJ/m²) [b]	Creep int.	PAS 1031	> 1000h (80 °C;4/5 MPa; water/water)		Factory confirmation 2.1		
	Elongation at break	PAS 1031	≥ 350 % (100/50/25/10 mm/min)				
	Peel strength of heating coil welded joint	DIN EN 12201-1	≤ 33 % brittle fracture (d_n 110; 23 °C)				
Influence on the quality of water [c] (where necessary)		PAS 1031 DVGW W 270 KTW BWGL	Positive list/ Odour and taste test / Microbiological test		Acceptance test certificate 3.1 / Factory confirmation 2.1		
Chemical resistance (liner)		ISO 4433-1/-2	Class S		Acceptance test certificate 3.1 / Factory confirmation 2.1		
Gas-resistance (for gas application)		DIN EN 1555-1	>20 h (80 °C; 2 MPa; d_n=32 / e_n=3 mm; gas/water; conditioned)		Acceptance test certificate 3.1 / Factory confirmation 2.1		
Reinforcement tape/ PE-GF intermediate layer							
MFR melt flow index: PE - GF		Annex Q	0,2 - 1,4 g/10min (5 kg; 190 °C; DIN EN ISO 1133)	per material	Factory confirmation 3.1	X	The materials undergo monitoring tests by the material manufacturer. Sampling can take place at the pipe manufacturer ("funnel sample")
Glass fibre content		Annex Q	≥ 60%; Consistency of deliveries		Acceptance test certificate 3.1	-	
Tensile strength GF tape		Annex Q	manufacturer specification		Acceptance test certificate 3.1 / Factory confirmation 2.1	X	
Areal weight GF tape		Annex Q	manufacturer specification		Acceptance test certificate 3.1 / Factory confirmation 2.1		
Thickness GF tape			manufacturer specification		Factory confirmation 2.1	X	
Elongation at break GF tape		Annex Q	manufacturer specification		Acceptance test certificate 3.1 / Factory confirmation 2.1		

[a] only to be verified if the requirement for volatile matter is not met.
[b] does not apply to material in strips
[c] only for drinking water application

Q 10 Pipe / system tests

The pipe tests (TT, BRT/PVT, AT) are grouped in Table Q 4.

Table Q 4 Pipe tests, system tests

Property [c]		Requirement for	Requirement (Parameter)	Type test (TT) per moulding compound				Internal monitoring (BRT/PVT)	External monitoring (AT)
				Testing to be conducted at [a, b]				Factory production control [see 7.1]	Monitoring test [see 5.2.3]
				N (ITT)	D	M	E		
Appearance		1555-2 5.1, 12201-2 5.1	smooth, clean, free from bubbles/scores Ends of pipes: vertical, burr-free	1x / PF	X	X	X	1x / startup and every 8 hours	1x / half-year / PF / PS [j]
Colour		1555-2, 5.2, 12201-2 5.2	consistent; preferably black	1x / PF	X	X	X	1x / startup and every 8 hours	1x / half-year / PF / PS [j]
Influence on the quality of water (where necessary)		KTW BWGL dir. PAS 1031	Positive list; odour and taste test	1x / PF	-	X	-	x	1x / year
Geometric properties		8074	(after 4 h at 23 °C) out-of-roundness/ diameter/ wall thicknesses/ boundary dimensions/ etc.	1x / DN and product variant	-	X	X	1x / startup and every 8 hours	1x / half-year / PF / PS [j]
Internal pressure creep rupture behaviour	20°C >165h	ISO TS-18226	(1 sample) >165 h (20°C; $p_{regr.}$; water/water)	1x / DN and product variant	-	-	-	1x / batch [k]	--
	20°C >1000h	ISO TS-18226	(3 samples[h]) >1000 h (20 °C; $p_{regr.}$; water/water)	1x / DN and product variant	-	-	-	--	1x / half-year / on each PF / PS[h,j,k]
Regression testing of product family representives at Tmax,op. - *see “ Q 11 Further remarks”*	$T_{max,op.}$°C <100h	ISO TS-18226	(2 samples) <100h ($T_{max,op.}$°C)	1x / family-representative	-	-	-	--	--
	$T_{max,op.}$°C <300h	ISO TS-18226	(2 samples) <300h ($T_{max,op.}$ °C)	1x / family-representative	-	-	-	--	--
	$T_{max,op.}$°C <3000h	ISO TS-18226	(4 samples) <3000h ($T_{max,op.}$ °C) / for qualification of product variants: 1000 h; P acc. to ISO TS- 18226 E.1.6	1x / family-representative and each product variant	-	X	X	--	--
	$T_{max,op.}$°C <10000h	ISO TS-18226	(4 samples) <10000h ($T_{max,op}$ °C)	1x / family-representative	-	-	-	--	--
	$T_{max,op.}$°C >10000h	ISO TS-18226	(1 samples) >10000h ($T_{max,op}$ °C)	1x / family-representative	-			--	--

Property [c]		Require-ment for	Requirement (Parameter)	Type test (TT) per moulding compound				Internal monitoring (BRT/PVT)	External monitoring (AT)
				Testing to be conducted at [a, b]				Factory production control [see 7.1]	Monitoring test [see 5.2.3]
				N (ITT)	**D**	**M**	**E**		
Short term burst test	20°C	ISO TS-18226	5 samples of each diameter of product family from same batch as the product family representative	1x / family-representative and each product variant	-	X	X	1x / batch [k]	1x / half-year / PF / PS [j,k]
Thermal stability (OIT)		1555-2, 8.2, 12201-2, 8.2	for each layer: ≥20min (200°C; 15±2mg; oxygen)	1x / PF	-	X	-	1x / batch	1x / half-year / PF / PS [j]
Melt flow rate (MFR) Liner/Cover		1555-2, 8.2, 12201-2, 8.2	0.2-1.4 g/10min / ± 20 % (5 kg;190 °C)	1x / PF	-	X	X	1x / batch [d]	1x / half-year / PF / PS [j]
Resistance to rapid crack propagation (RCP)		1555-5, B	(Number of samples acc. to EN ISO 13477/13478) at Tmin,op./ including strippable layer: critical pressure p_c >1.5 PN preferable at 250/500 mm SDR 11	1x / PF	-	X	X		1x / 2 years / PS
Longitudinal reversion (only for e≤16mm)		1555-2, 8.2, 12201-2, 8.2	≤3 % / original condition (110 °C; 200 mm; 60/120 min)	1x / PF	-	X	X	1x / year / PF / MC / PS	1x / half-year / PF / PS [j]
Marking		Annex Q	see Table Q 3	1x / DN [i]	-	X	-	1x / startup and every 8 hours	1x / half-year / PF / PS [j]
Homogeneity (carbon black/ pigment dispersion)		PAS 1031	(3 samples) ≤ grade 3; Cl.$_{\mathbf{dominant}}$: A1, A2, A3 or B	1x / PF		X		1x / week / extruder, as well as with any change in moulding compound and with a negative creep internal pressure test (*see Q 11 further remarks*)	1x / half-year / PF / PS [j]
Additional tests for bonded composite pipes and for multilayer inner pipes									
Structural integrity after deflection		1555-2, A.7, 12201-2, B 7	Integrity of the structure after deflection > 80% of the initial stiffness value	1x / PF	-	X	X	1x / year / MC / PS / PF	
Delamination after internal pressure creep rupture test		1555-2, A.6, 12201-2, B.6						1x / batch / PF	1x (after a creep test or elongation-at-break test) [j]
Test of suitability for use on the piping systems – (pipes + field fittings) *see Q 11 Further remarks*									
Elevated temperature test		ISO TS-18226	2 fittings to pipe body joints: t_{test}; T_{test} >= 25°C + Tmax,op.; P≥LPL (from regression analysis) acc. to ISO TS-18226 E.1.7.1	1 x / fitting – pipe body combination		X	X		
Axial load capacity/axial load test		ISO TS-18226	2 samples with fittings, result should be equivalent to short time burst value (above) acc. to ISO TS 18226 E 1.7.2	1 x / fitting – pipe body combination		X	X		

Property [c]	Require-ment for	Requirement (Parameter)	Type test (TT) per moulding compound				Internal monitoring (BRT/PVT)	External monitoring (AT)
			Testing to be conducted at [a, b]				Factory production control [see 7.1]	Monitoring test [see 5.2.3]
			N (ITT)	D	M	E		
Cyclic pressure service [l]	ISO TS-18226	6 samples (RTP system with field fittings as endcaps); $T_{max,op.}$; p_{MSP} [m]; 50000 cycles; $f \leq 0{,}1$ Hz	1x / family-representative		X	X		
Gas-tightness of fittings (only gas)	ISO TS-18226	2 RTB joints for each type of fitting. At T_{max}.op. and $T_{min.op.}$;Pgas 1/10 of MSP;	1x / family-representative					

[a] N: New system [initial test, see section 5.2.1] M: Change of moulding compound [supplementary test, see section 5.2.2]
E: Extension of the product range [supplementary test, see section 5.2.2] D: Change of design [supplementary test, see section 5.2.2]
[b] Successful test validates pipes with a smaller d_n within the product family. Additional type tests have to be performed if the product range is extended.
[c] All the properties with the exception of the marking apply to the base pipe of pipes with a strippable layer which are without this layer. Condition, colour, weather-resistance and marking also apply to the pipes with a strippable layer, including this layer.
[d] Test is required when using work-in-progress materials from the same moulding compound. Test does not apply when using 100% new materials. Applies to all layers of co-extruded pipes during the MFR test. Moreover (and if not already tested in the BRT) X / year / PF / MC / PS within the scope of PVT
[h] d_n<250 mm: 3 sample items; $d_n \geq 250$ mm: 1 sample item; or by agreement with the monitoring centre/ indirect test in accordance with a study.
[i] by reviewing the test results of the manufacturer
[j] If there are no negative results three times in a row, the monitoring frequency is set to once a year. If there are negative results, the monitoring frequency of the PG is restored.
[k] either constant pressure survival test or short term burst test has to be conducted for internal/external monitoring
[l] test only required for RTB systems for cyclic pressure service
[m] p_{MSP} defined by manufacturer on basis of $p_{regr.}$ according to ISO TS- 18226 Annex E Figure E.1

Qualification of the Product family (PF) representative: determination of the Lower Prediction Limit (LPL)

The relationship between internal pressure and time to failure shall be determined by a series of stress rupture tests under constant pressure at the qualification test temperature, as described in ISO TS- 18226 Annex E.1.4. The results of the stress rupture tests shall be used to construct a regression relationship, from which the Lower Prediction Limit (LPL) shall be determined.

Q 11 Further remarks

Squeezing:
Squeezing is not allowed.

Fittings:
At least one set of fittings shall be specified and qualified for each RTP product. The fittings used for these tests may be either field fittings or re-usable test end-fittings. However, at least one regression point shall be measured in excess of 10 000 h, with field end-fittings attached to both ends of the pipe body.

Homogeneity:
From minimum three test specimens (pipe sections) of a production batch, at least one microtome section each is to be taken transversely to the tube axis with a thickness of 10 µm. At 75- to 100- times magnification, the microtome sections are examined for size and character of possible defects. The total area examined should not be less than 100 mm².
If inhomogeneities > 0,02mm², such as bubbles, cavities and foreign bodies, are found, the test shall be extended to a further three test items. If inhomogeneities > 0.02 mm² discovered once again during this testing, the production volume concerned is to be rejected. This procedure may only be used in the context of internal monitoring.

Rating factors:
for enhancement of maximum service pressures at reduced maximum operating temperatures, rating factors are to be determined by rupture tests according to ISO/TS-18226 E.2.1. and E.2.4 (t<100h, t<300h, t<3000h)

Q 12 Number of samples

The number of samples to be taken for the monitoring test is shown in Table Q 5.

Table Q 5 Minimum number of samples to be taken for the monitoring test (type test may require more samples)

Product family (see section Q3)	**Mechanical/physical examinations**		**Hygiene examinations** Number of samples and length
	Number of samples	**Length L per sample**	
each $P_{roduct}F_{amily}$	12 + 3 retained samples	1200 mm	one dimension 4x1000 mm

Annex R ZP 9.27.01 – Pressure pipes made of polyethylene (PE) with short fiber reinforced intermediate PE-layer

(Edition: 19.03.2021)

R 1 Inspection and certification principles (also refer to section 2):

DIN 8074	Polyethylene (PE) pipes - PE 80, PE 100 - Dimensions
DIN 8075	Polyethylene (PE) pipes - PE 80, PE 100 - General quality specifications
PAS 1031	Polyethylene (PE) as a material for the manufacture of pressure pipes and fittings; PAS1031
ZP 14.23.39	Annex O: Polyethylene pipes for alternative laying techniques
DIN EN 12201-1	Plastic piping systems for water supply, and for drainage and sewerage under pressure - Polyethylene (PE) - Part 1: General
DIN EN 12201-2	Plastic piping systems for water supply, and for drainage and sewerage under pressure - Polyethylene (PE) - Part 2: Pipes
DIN EN 12201-5	Plastic piping systems for water supply, and for drainage and sewerage under pressure - Polyethylene (PE) - Part 5: Fitness for purpose of the system
FprCEN/TS 12201-7	Plastic piping systems for water supply, and for drainage and sewerage under pressure - Polyethylene (PE) - Part 7: Guidance for the assessment of conformity
DIN EN ISO 15494	Plastics piping systems for industrial applications - Polybutene (PB), polyethylene (PE), polyethylene of raised temperature resistance (PE-RT), crosslinked polyethylene (PE-X), polypropylene (PP) - Metric series for specifications for components and the system
DIN EN 1555-2	Plastic piping systems for the supply of gaseous fuels - Polyethylene (PE) - Part 2: Pipes
DIN EN 1555-5	Plastic piping systems for the supply of gaseous fuels - Polyethylene (PE) - Part 5: Fitness for purpose of the system
FprCEN/TS 12201-7	Plastic piping systems for water supply, and for drainage and sewerage under pressure - Polyethylene (PE) - Part 7: Guidance for the assessment of conformity
DIN EN 10204	Metallic products - Types of inspection documents
KTW-BWGL	Basis for assessment of plastic and other organic materials in contact with drinking water

R 2 General

Appendix R (ZP 9.27.01) of this certification scheme applies to seamless multilayer pipes made of PE 80, PE 100 or PE 100-RC with short fiber reinforced PE intermediate layer and contains, in conjunction with sections 1 to 8 all requirements for the award of the "DIN*plus*" quality mark for plastic piping systems. The quality enhancement is summarised in Table R 1.

If the pipes conform to the „Evaluation basis of the hygienic assessment of organic materials in contact with drinking water (KTW-BWGL)“ and are marked with the application disignation TW (i. e. drinking water suitable), they may also be used in drinking water application.

Table R 1 Quality enhancement

Anforderungen	**ZP 9.27.01**	DIN 8074	DIN 8075	DIN EN 12201	**siehe:**
Participation in the Plastic Pipe Association (KRV) recycling system	**+**	-	-	-	Section 1.2
MFR PE-GF 190/5 ≤ 0,5 g/10 min	**+**	-	-	-	Annex R
MFR deviation granulate/pipe ≤ 20 % bei 190 °C/ 5 kg	**+**	-	-	-	Annex R
Heat reversion: longitudinal shrinkage ≤ 1 %	**+**	-	≤ 3 %	-	Annex R
Thermical length-extension coefficient ≤ 0,1 mm/m K	**+**	-	about 0,2	-	Annex R
Materials of inner and outer layer must be listed as pipe materials in the KRV material list “KRV-Werkstofflisten”.	**+**	-	-	-	Annex R

R 3 Product groups

The product groups (based upon DIN EN 12201-7 Table 1) are shown in Table R 2.

Table R 2 Product groups

Peoduct group	Product type	Nominal diameter (DN/OD)
161	Pipes	d ≤ 63 mm
162		75 mm ≤ d ≤ 225 mm
163		250 mm ≤ d ≤ 630 mm
164		710 mm ≤ d ≤ 1600 mm
165		1800 mm ≤ d ≤ 2500 mm

R 4 Substances / materials used

The composite plastic pipes made of PE 80, PE 100 oder PE 100-RC, with a PE glass fiber intermediate layer, consists of three layers concentric to each other. The centrally arranged short-fiber-reinforced PE intermediate layer is filled with ≥ 15% (weight percent) glass fiber. The pipes are manufactured using a multilayer coextrusion process. The intermediate layer reduces the thermal elongation of the complete pipe.

The material used, polyethylene PE 80, PE 100 or PE 100-RC, must comply with DIN 8075. The material PE 100-RC must also comply with the certification program ZP 14.23.39 or equivalent requirements. Returned-, reclaimed- and recyclet material must not be used.

The pipe manufacturer may only use the materials for the inner and outer layer that are listed or verified in the KRV material lists and for which he has passed a type test in accordance with section 5.2.1 or a supplementary test in accordance with 5.2.2 of this certification scheme via DIN CERTCO for each production site.

For the inner- and outer layer only granulate mixtures of the same MRS class or only RC materials (i.e. same material designation) may be mixed. The pipe manufacturer must confirm that it does not object to this.

Only KRV-listed PE materials and their blends are to be used for the PE portion of the intermediate layer. The use of own circulation material is permissible. The GF content (proportion of glass fiber) in the intermediate layer must be at least 15% (by weight). All additives used for the glass-fiber-reinforced intermediate layer must be evenly distributed.

The pipe manufacturer must ensure that for each type of material the documents are submitted to DIN CERTCO by the respective raw material producer. This also applies to the type of fibre glass used in the intermediate layer. For that, the color, fiber type, fiber length and fiber diameter as well as the fiber content (weight percentage) must be specified.

R 5 Dimensions

DIN 8074 governs the outside diameters and total wall thicknesses of the pipes.

(Current versions of) the relevant factory standards will apply with regard to the wall thicknesses of the outer, intermediate and inner layer of the pipes. It must be approved by DIN CERTCO and must be stored there. Single exceedances of the total pipe wall thickness s may be + 0.2 s for s ≤ 10 mm and + 0.15 s for s > 10 mm.

The thickness of the individual layers on the pipe cross-section is determined using a measuring microscope. The outside diameter is determined by means of a circumferential measuring tape (circometer). Other suitable methods are permissible.

The ovality is determined as the difference between the measured maximum and minimum outside diameter at the same cross section to 0,1 mm accuracy.

R 6 Delivery form

The pipes are supplied as bar stock in straight lengths. The construction length is to be specified by the manufacturer.

R 7 Processing and laying guidelines

In the case of installation measures that go beyond the specifications of the DIN standards, DVGW worksheets and KRV installation instructions, the pipe manufacturer must provide supplementary information on installation.
The pipe manufacturer must point out in its installation instructions that trenchless installation techniques with butt-welded pipes are to be excluded.

R 8 Minimum marking

All the pipes are to be marked continuously and permanently (embossing/laser/print) - at intervals of about 1 m - with the minimum information indicated in Table R 3.

Tabelle R 3 Minimum marking of the pipes

Designation	Sample marking
Name and/or trademark of the manufacturer	xyz
Quality mark for plastic pipes with a register number	P1R0000
KRV trademark (obligatory)	[1]
Product standard	Dimensions according DIN 8074
Material and designation (every layer)	PE 100 / PE 100 - GF / PE 100
Dimension ($d_n \times e_n$)	32 × 3,0
SDR series of pipe series	SDR 11
Intendes application [2]	DA
Nominal pressure raing	PN 16
Manufacturer's details (by name or encrypted) Production periode Production site (if there are more than one)	 11/2020 Berlin

[1] Preserving license rights
[2] Application DA, TW, optional G and AW

R 9 Material/goods inward check

The material tests (TT, BRT/PVT, AT) are grouped in Table Tabelle R 4.

Table R 4 Material test (per moulding compound)

Property		Require-ments for	Requirement (Parameter)	Type test (TT)	Internal monitoring (PVT)		External monitoring (AT)
				Erstprüfung (ITT)	Test confirmation (according to DIN EN 10204)	Spot checks	
Inner – and outer layer							
Classification / MRS value (Verific. of long-term strength)		PAS 1031 ISO 15494 EN 12201-1	above the reference characteristic; MRS (20°/50J) ISO9080/ISO12162: PE 80 ≥ 8 MPa; PE 100 ≥ 10 MPa	The materi-als are type-tested by the material manufacturer	Factory confirmation 2.1		The materials undergo monitoring tests by the material manufacturer. Sampling can take place at the pipe manufacturer ("funnel sample")
Density		PAS 1031 ISO 15494 EN 12201-1	≥ 930 kg/m³ (23 °C)		Acceptance test certificate 3.1		
Colour		EN 12201-1; EN 1555-1	acc. to application		Factory confirmation 2.1		
Weight loss: volatile constituents or moisture content		PAS 1031 ISO 15494 EN 12201-1	vol. const. ≤ 350 mg/kg moisture cont. ≤ 300 mg/kg		Acceptance test certificate 3.1	X	
MFR melt flow index		PAS 1031 DIN EN 12201-1	0.2-1.4 g/10 min ± 20 % (5 kg;190 °C)		Acceptance test certificate 3.1	X	
Thermal stability (OIT)		PAS 1031 DIN EN 12201-1	≥ 20min (200 °C;15 ± 2 mg; O2)		Acceptance test certificate 3.1		
Homogeneity (carbon black dispersion and appearance)		PAS 1031 ISO 15494 EN 12201-1	≤ grade 3; Cl. A1,A2,A3,B		Factory certificate 2.2		
Resistance to slow crack growth (SCG) [b]		PAS 1031 ISO 15494	no failure (d_n 110; SDR11; 80 °C; 500 h; water/water 8,0 / 9, 2 bar)		Factory confirmation 2.1		
Resistance to rapid crack propagation (RCP) [b]		PAS 1031 ISO 15494 EN 12201-1	no failure (d_n 250/500;SDR11; 0 °C; air 8/10 or 20/24 bar)		Factory confirmation 2.1		
Weathering resistance (WB), black mat.: carbon black con-tent [b]		PAS 1031 ISO 15494 EN 12201-1	2-2.5 % by weight		Factory certificate 2.2		
Weather-re-sistant col-	Creep int.	PAS 1031 EN 12201-1	> 1000h (80 °C;4/5 MPa; water/water)		Factory confirmation 2.1		
	Elongation at break	PAS 1031 EN 12201-1	≥ 350 % (100/50/25/10 mm/min)				

oured material (after weathering ≥ 3.5 GJ/m²) [b]	Peel strength of heating coil welded joint.	EN 12201-1	≤ 33 % brittle fracture (d_n 110; 23 °C)				
Influence on the quality of water (where necessary) [a]		KTW-BWGL DVGW W 270	Positive list/ Odour and taste test / Microbiological test		Factory confirmation 2.1/ Acceptancetest certificate 3.1		
PE-GF intermediate layer							
PE-GF Glass fibre content		Annex R	15 - 20 (-0/+1) Gew. %; Consistency of deliveries	The materials are type-tested by the material manufacturer.	Acceptance test certificate 3.1		The materials undergo monitoring tests by the material manufacturer. Sampling can take place at the pipe manufacturer ("funnel sample")
PE-GF Glass fibre geometrie		acc. to spec.	Type/designation acc. to specification		Factory certificate 2.2		
Dry loss: volatile matter or moisture content		PAS 1031 ISO 15494 EN 12201-1	volatile matter ≤ 350 mg/kg moisture content ≤ 300 mg/kg		Acceptance test certificate 3.1	X	
Therm. Stability (OIT) PE-GF		PAS 1031 DIN EN 12201-1	≥ 20 min (200 °C;15 ± 2 mg; O2)		Acceptance test certificate 3.1[c]		
MFR melt flow index: PE - GF		PAS 1031 DIN EN 12201-1	0,2-1,4 g/10 min ± 20 % (5 kg;190 °C)		Acceptance test certificate 3.1	X	

[a] only for drinking water application
[b] Does not apply to material in strips
[c] Acceptance test certificate 3.1 by the supplier or measurement/proof by the pipe manufacturer

R 10 Pipe / system tests

The pipe tests (TT, BRT/PVT, AT) are grouped in Table R 5.

Tabelle R 5 Pipe tests (layer I: inner; M: middle, A: outer)

Property [c]		Requirement for	Requirement (Parameter)	Type test (TT) per moulding compound				Internal monitoring (BRT/PVT)	External monitoring (AT)
				Testing to be conducted at [a, b]				Factory production control [see 7.1]	Monitoring test [see 5.2.3]
				N (ITT)	D	M	E		
Condition		ISO 15494 EN 12201-2, 5.1	smooth, clean, free from bubbles/scores Ends of pipes: vertical, burr-free	1x / PG	X	X	X	1x / startup and every 8 hours	1x / half-year / PG / PS [j]
Colour		ISO 15494 EN 12201-2, 5.2	TW: consist. blue / black+blue strips; or DA: consist.; pref. black	1x / PG	X	X	X	1x / startup and every 8 hours	1x / half-year / PG / PS [j]
Influence on the quality of water [i]		EN 12201-2, 5.3 KTW-BWGL PAS 1031	Positive list/ Odour and taste test / Microbiological test	1x / PG	-	X	-	acc. to KTW-BWGL	1x / year
Geometric properties incl. single layers		ISO 15494	acc. to standard/factory standard	1x / PG	-	X	X	1x / startup and every 8 hours	1x / half-year / PG / PS [j]
Creep internal pressure behaviour	20 °C <165 h	DIN 8075	3 failure points	per material type[f] (PE80, PE100, PE100-RC) intermediate layer, glass fibre type and glass fibre content (maximum proportion and maximum layer thickness)	x	-	-	-	-
	80 °C >165 h bis 1.000 h	DIN 8075	3 failure points		x	-	-	80 °C/165h (per moulding compound [f]) 1 production control / batch	80 °C/1.000h 1x/ half-year /PG /PS (per moulding comp. [f])[h] [j]
	80 °C >1000h bis 4.000 h	DIN 8075	3 failure points		x	-	-	-	-
	> 4.000 h	DIN 8075	3 failure points (demolition permissible after reaching the expected minimum service life)		x	-	-	-	-
Elongation at break		Annex R	(numb. of samples acc. to. EN ISO 6259-1) ≥ 50 % (100/50/25/10 mm/min)	1x / PG	-	X [g]	X	1x / batch [d] (min. 1x / year / MC [l] / PG / PS)	1x / year/ PG / PS [j]
Thermal stability (OIT) (I, M, A)		ISO 15494 12201-2, 8.2	for each layer: ≥20min (200°C; 15±2mg; oxygen) acc. to DIN EN ISO 11357-6	1x / PG	-	X	-	1x / batch	1x / half-year / PG / PS [j]
Melt flow rate (MFR) PE (I, A)		ISO 15494 12201-2, 8.2	For each layer 0,2-1,4 g/10min ± 20 % (5 kg;190 °C)	1x / PG	-	X	X	1x / batch	1x / half-year / PG / PS [j]

Property [c]	Require-ment for	Requirement (Parameter)	Type test (TT) per moulding compound				Internal monitoring (BRT/PVT)	External monitoring (AT)
			Testing to be conducted at [a, b]				Factory production control [see 7.1]	Monitoring test [see 5.2.3]
			N (ITT)	D	M	E		
Melt flow rate (MFR) PE fibe layer (M)	ISO 15494 12201-2, 8.2	Abweichung Rohr/Granulat gem. Werksnorm 0,2-1,4 g/10min (5 kg;190 °C)	1x / PG	-	X	X	1x / Charge	1x / half-year / PG / PS [j]
Longitudinal shrink-age (only for e≤16mm)	ISO 15494 12201-2, 8.2	≤ 1 % / ursprüngliche Beschaffen-heit (110 °C; 200 mm; 60/120 min)	1x / PG	-	X	X	1x / EG / Jahr / FM / PS	1x / half-year / PG / PS [j]
Coefficient of linear thermal expansion	Anhang R	≤ 0,1 mm/m K (Temp.-Diff. 30 - 60K), acc. to ISO 2505 on the sam-ples from longitudinal shrinkage measurement	1x / PG	-	X	-	-	1x / half-year / PG / PS [j]
Marking	ISO 15494 EN 12201-2,11.2; Tab. A1- 2	see table R 3	1x / DN [i]	-	X	-	1x / startup and every 8 hours h	1x / half-year / PG / PS [j]
Homogeneity (car-bon black/ pigment dispersion, Appear-ance) (I, A)	PAS 1031	(3 samples) ≤ grade 3; Cl.$_{\mathbf{dominant}}$: A1, A2, A3 or B (ISO 18553)	1x / PG		X		1x / week / extruder as well as at every MC change and at neg. internal pressure test (see R 11 „remarks homoge-neityt“) [k]	1x / half-year / PG / PS [j]
Tensile strength for butt welding (PE-GF zu PE-GF)	ISO 15494 EN 12201-5, 4.2 Annex R	acc. to ISO 13953 with fz ≥ 0,8 and elongation at tens. strength ≥ 5% [m]	1x / PG	X	X	X	1x / half-year / PG / PS	1x / year/ PG / PS [j]
Technological bend-ing angle test (PE-GF to PE-GF)	DVS 2203-5	Bending angle ≥ 110°	1x / PG	X	X	X	1x / half-year / PG / PS	1x / year/ PG / PS [j]
Structural integrity after deflection	EN 12201-2, B.7	80% of the initial stiffness value (Verformung 30%des d_{em} ; ISO 13968)	1x / PG	-	X	X	-	1x /year / MC / PG /EG
Separation of layers	EN 12201-2, B.6	no layer separation during test	X	X	X	X	-	1 x (after internal pres-sure test resp. after elon-gation at brake test) [j]
Resistance to slow crack growth for e≤5mm (Cone-Test)(only applica-tion G)	DIN EN 1555-2	≤ 10mm/day; sample acc. to EN ISO 13840	X [e]	-	X	X	-	1x / year / PG / PS [ehj]
Resistance to slow crack growth for e>5mm (Notch	DIN EN 1555-2	No failure 500 h (80°C; PE 80 SDR 11: 8 bar, PE 100 SDR 11: 9,2 bar; sample acc. to DIN EN ISO 13479	X [e]	-	X	X	-	1x / year/PG / PS [ehj]

Property [c]	Require-ment for	Requirement (Parameter)	Type test (TT) per moulding compound				Internal monitoring (BRT/PVT)	External monitoring (AT)
			Testing to be conducted at [a, b]				Factory production control [see 7.1]	Monitoring test [see 5.2.3]
			N (ITT)	D	M	E		
test)(only applica-tion G)								

[a] N: N: New system [initial test, see section 5.2.1] M: Change of moulding compound [supplementary test, see section 5.2.2]
E: Extension of the product range [supplementary test, see 5.2.2] D: Change of design [supplementary test, see section 5.2.2]
[b] Successful test validates pipes with a smaller d_n within the product group. Additional type tests have to be performed if the product range is extended.
[c] The properties apply to the entire pipe, unless restricted to the respective layers by the additions I: Inner, M: Middle and A: Outer.
[d] Test is required when using work-in-progress materials from the same moulding compound. Test does not apply when using 100% new materials. Applies to all layers of co-extruded pipes during the MFR test. Moreover (and if not already tested in the BRT) X / year / PG / MC / PS within the scope of PVT
[e] Only required if outer layer thickness < 25 % of total pipe wall thickness
[f] Per material type (PE80, PE100, PE100-RC) intermediate layer, glass fibre type and glass fibre content (maximum proportion and maximum layer thickness)
[g] Sampling process for one diameter
[h] d_n<250 mm: 3 sample items; $d_n \geq 250$ mm: 1 sample item; or by agreement with the monitoring centre/ indirect test in accordance with a study.
[i] Only application TW (Trinkwasser)
[j] If there are no negative results three times in a row, the monitoring frequency is set to once a year. If there are negative results, the monitoring frequency of the PG is restored.
[k] Measurement of homogeneity in WPK only on outer layer (A)
[l] Only with moulding compound change of Glass fibre layer (M)
[m] Brittle fracture due to fibre content permissible if this occurs within the fibre-reinforced layer, the elongation at tensile strength is met and the bending angle test is passed

R 11 Remarks

As a rule, products which do not meet the specified requirements are to be rejected. Further conclusions apply to individual requirements about quality assurance.

<u>MFR melt flow rate index (PE outer/inner layer):</u>
If the measurement result of the MFR value deviates from the material inward value and from the measurement on the pipe by more than 20 %, a monitoring test must be performed immediately on the granulate from the respective reservoir of the processing machine(s). If a deviation in excess of 20 % is discovered in turn, the production volume affected is to be rejected. These pipes may no longer be used as work-in-progress materials for pressure pipes.

<u>Longitudinal shrinkage (change after hot storage):</u>

If the requirement is not met, testing must be repeated immediately on the pipes manufactured previously from the same extruder. If the re-test is not passed either, the production volume concerned must be rejected, and the testing frequency must be extended to once a week per extruder, as well as during any startup. If no deviations are discovered after a period of two months, the specified frequency can be restored.

Homogeneity (Factory production control):
From minimum three test specimens (pipe sections) of a production batch, at least one microtome section each is to be taken transversely to the tube axis with a thickness of 10 µm. At 75- to 100- times magnification, the microtome sections are examined for size and character of possible defects. The total area examined should not be less than 100 mm².
If inhomogeneities > 0,02mm², such as bubbles, cavities and foreign bodies, are found, the test shall be extended to a further three test items. If inhomogeneities > 0.02 mm² discovered once again during this testing, the production volume concerned is to be rejected. This procedure may only be used in the context of internal monitoring.

R 12 Number of samples

The number of samples to be taken for the monitoring test is shown in Table R 6.

Tabelle R 6 Minimum number of samples to be taken for monitoring test (type test may require more samples)

Product groups (s. Section 4.1)	Mechan./Physical. examinations		Hygiene examinations number of samples and length
	Number of samples	Number of samples	
161 ≤ 63 mm	6 + 3 retained sample	L = 5 × outer-Ø + 250 mm (i.e.: 500 mm < L < 1200 mm)	d_e ≤ 32 mm: 10 x 1000 mm
162 75 – 225 mm	6 + 3 retained sample	1200 mm	32 mm < d_e ≤ 50 mm: 4 x 1000 mm
163 250 – 630 mm	6 + 3 retained sample	1200 mm	50 mm < d_e ≤ 110: 4 x 500 mm
164 710 – 1600 mm	6 + 3 retained sample.	1200 mm	
165 1800 – 2500 mm	6 + 3 retained sample	1200 mm	110 mm < d_e : 3 x 500 mm